Table of Contents

Appendix A.1

Appendix B.1

Appendix C.1

Revisions List

Rev	Date	Revision Description
A	**1/01**	**1. Whole manual updated to current standards.** **2. Drawings in Appendix C were revised to show updated Engine Connections.**
B	**4/01**	**1. Section 1.2.1 Features were missing the Section Numbers. Created Cross-Referencing.** **2. Section 3.8 DC Power was revised adding APS. Please review Section carefully.** **3. Section 4 was for a different Processor. Replaced with correct Sections.** **4. Section 5 was missing Control Head installation.** **5. Appendix A-1 APS sheet replaced with S-214.** **6. Appendix A-1 MMC-288 added APS**

1.0 INTRODUCTION

1.1 THIS MANUAL

The purpose of the ClearCommand System manual is:

- Operation (Section 2)
- Installation (Section 5)
- Adjustments (Section 6 and 7)
- Trouble Shooting Reference (Appendix B-1)

Keep this Manual on the vessel for future reference.

Throughout the manual special attention should be paid to the following boxes:

NOTE: Contains Helpful Information

CAUTION: Damage may be caused to the equipment if these messages are disregarded.

WARNING: Personal injury may result if theses messages are disregarded.

Appendix A-1 contains the Service Sheets created by ZF Mathers to aid in servicing, setup, warranty, and documenting of this vessels parameters.

Appendix B-1 contains a brief Trouble Shooting. If you cannot find a solution within the Trouble Shooting, contact ZF Mathers Service Department.

Appendix C-1 contains a Reference Drawing and a Notes page. During Installation and Testing, take special care to verify all wiring is to specifications, terminations are correct, and that all Notes in the Drawing Notes page are followed.

1.2 CLEARCOMMAND SYSTEM

The Control Processor (hereafter referred to as Processor) is designed specifically for:

- Caterpillar Engines that require a Pulse Width Modulated [PWM] speed signal
- Transmissions that require mechanical clutch selection

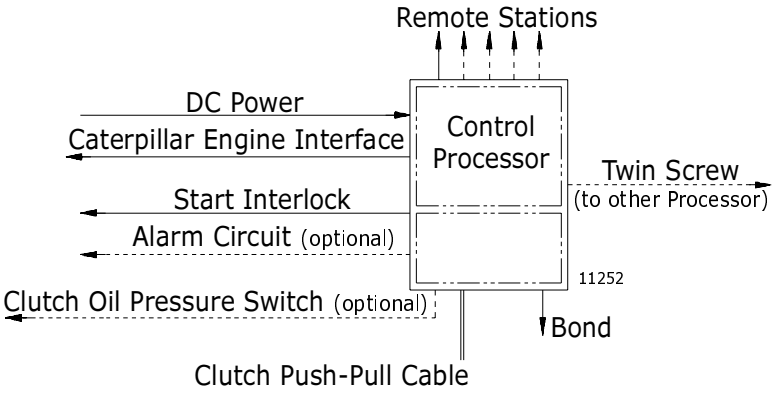

Figure 1: Basic Control System Diagram

During Installation and Testing, take special care to verify all wiring is to specifications, terminations are correct, and that all Notes in Appendix C Drawing Notes are followed.

1.2.1 Features

- Sequencing of Clutch and Engine Speed (Section 2.1)
- Start Interlock (Section 2.2)
- Station-in-Command Indication (Section 2.3)
- Warm-up Mode (Section 2.4)
- ClearCommand System Fault Indication (Section 2.5)
- High / Low Idle Mode (Section 2.6)
- Proportional Pause on through Neutral Shifts (Section 7.2)

- ClearCommand Failure Alarm Contact (optional) (Section 8.1)
- Clutch Oil Pressure Interlock (optional) (Section 8.2)
- One to Five Remote Stations (Appendix C-1 Drawing)

1.2.2 System Requirements

Refer to Section 3.

- One Processor per engine
- One Control Head per remote station
- One Engine Stop Switch per remote station
- One 33C Push-Pull cable for Clutch connection
- One Eight-conductor electric cable for each Control Head connection
- One Four-conductor electric cable for engine connection
- One Two-conductor electric cable for Start Interlock connection
- One Two-conductor electric cable for power connection
- One Two-conductor electric cable for Serial Communication connection between Processors (Twin Screw only)

2.0 OPERATION

2.1 DC POWER ON

When control system DC power is turned ON:

- Processor will move to the Neutral/Idle position.
- Intermittent tone will sound at all Stations indicating that no Station has command. (refer to Section 2.5)

To take command at a Station:

- All Control Head lever(s) must be in the Neutral/Idle (vertical) detent.
- Operator must depress the transfer button for at least 1/2 second.

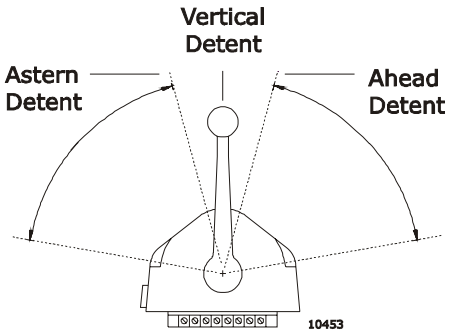

Figure 2: Control Head Detents

The tone will stop at all Stations and the red indicator light will be lit at the Station-in-Command.

NOTE: Only one Station has command at a time.

2.2 ENGINE START

Features related to main engine start:

Start Interlock to block the engine start signal if the DC power has not been turned ON.

Start Interlock to block the engine start signal if no Station has command.

Start Interlock to block the engine start signal if clutch is engaged.

The engine Start signal will be connected through the Processor to the starter solenoid or relay. Refer to Section 5.3.3 for Start Interlock connection.

2.3 STATION TRANSFER

When transferring command from one Station to another (refer to Figure 3:):

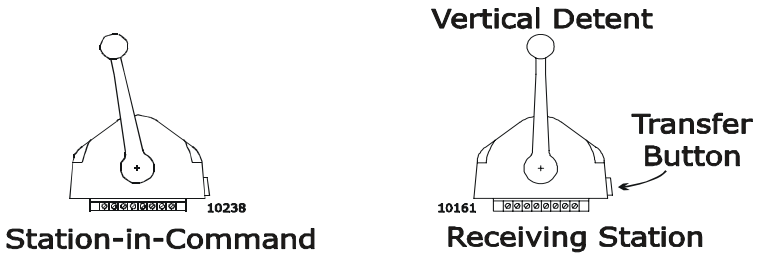

Figure 3: Station Transfer

A) Leave the Control Head lever(s) of the Station-in-Command in any position.

B) Place the Control Head lever(s) of the Station taking command in the Neutral/Idle (vertical) detent position.

C) At the Station taking command depress and hold for one second the transfer button.

- The red indicator will light indicating the Station has taken command.
- The Control System will remain unchanged for one second after the red indicator lights on the Control Head to allow the operator time to move the Control Head lever(s) to a position approximately matching the last command setting.

2.4 WARM-UP MODE

At the Station-in-Command, ensure that the Control Head lever is in the Neutral/Idle (vertical) position (refer to Figure 4:):

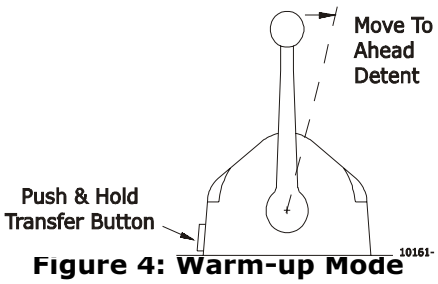

Figure 4: Warm-up Mode

A) Depress and hold the transfer button.

B) After one second move the Control Head lever to the Ahead detent position.

C) Now release the transfer button.

- The red indicator light will blink slowly indicating Warm-up Mode and the clutch has stayed in Neutral. The operator can now start and warm-up the engine while moving the Control Head lever through the throttle ranges.

D) When the Control Head lever is returned to Neutral/Idle (vertical) detent, ClearCommand will reset to Normal Operating Mode after one second.

2.5 CONTROL HEAD TONES

Low Repetition Rate Tone is normal when DC power is first applied to ClearCommand. This tone indicates the Processor is in Neutral and Idle, and the operator can take command at a Station.

If this tone occurs during operation, refer to Appendix B Trouble Shooting Section.

Steady Tone signals a voltage problem or a component has failed. Confirm the voltage is steady between 12 and 24 volts DC, and that there is not a momentary voltage drop.

If tone continues, refer to the Appendix B Trouble Shooting.

High Repetition Rate Tone is used to signal a jam condition of the clutch push-pull cable. The Processor has stopped when this tone is heard. Moving the Control Head lever away from the position that the tone was encountered should move the push-pull cable out of the jam condition and stop this tone.

The cause of the excessive push-pull cable load MUST be found. Refer to Appendix B Trouble Shooting Section.

Repetitive Signal - One long - One Short Tone is used to show a clutch position feedback error.

Refer to Appendix B Trouble Shooting Section.

2.6 HIGH / LOW IDLE OPTION

The ClearCommand Control System offers an option of two engine IDLE RPM settings.

- The normal Low Idle RPM is the default Idle setting.
- A High Idle RPM may be set electrically.

The operator selects High or Low Idle by depressing and releasing the transfer button at the Station-in-Command while in the Control Head lever is in the Ahead detent. This feature allows the operator the option of toggling between Low Idle and High Idle.

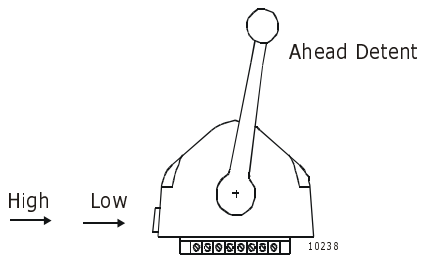

Figure 5: High/Low Idle

3.0 REQUIRED PARTS AND TOOLS

3.1 PROCESSOR

One Processor required per engine (refer to the System Drawing in Appendix C-1)

Mounting Hardware is installer supplied.

Included with the Processor:

- Wago Tool
- Anti-Static Wrist Strap
- Spare Fuse

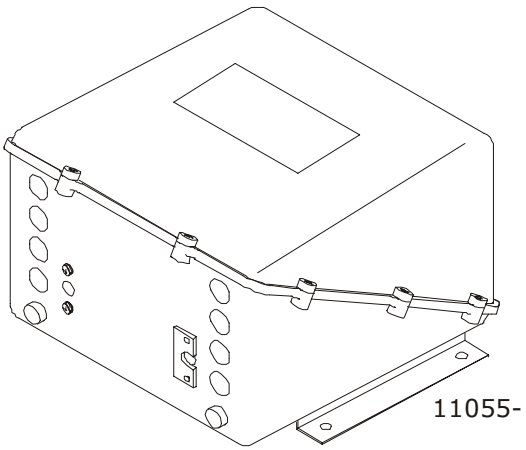

Figure 6: Control Processor

3.2 CONTROL HEAD

Refer to Appendix A-1 for Control Head Variations and Dimensions Sheets.

One Control Head required per Station.

Included with the Control Head:

- Gasket (400 Series Control Head only)

- Terminals
- Mounting screws
- Watertight cable grip for the cable entrance on the Processor
- Control Head Dimensions Variations & Installation Sheets

NOTE: Retrofit applications may require planning for an adapter pad to cover the old Control Head cutout. A variety of adapter and cover pads are available from ZF Mathers, LLC.

3.3 Electric Cable

Eight-Conductor Cable (Control Head to Control Processor)
Shielded 20 AWG, 300V, PVC Insulated: -20 degrees C to +80 degrees C.
UL VW-1 PVC Jacket. Color Coded.

Two Conductor Power Cable (Processor to DC Power Supply)
14 AWG, 300V, PVC Insulated: -20 degrees C to +105 degrees C
UL VW-1 PVC Jacket. Red with purple stripe and black.

Two Conductor Start Interlock Cable (Starter Switch to Processor to Starter Solenoid)
16 AWG, 300 V, PVC Insulated: -20 degrees C to +105 degrees C
UL VW-1 PVC Jacket. Yellow with red stripe.

3.4 Tools Required For Installation

- Wago Tool (provided)
- Anti-static Wrist Strap (provided)
- Wire cutter, stripper, and crimper (Recommend Thomas & Betts WT-2000)
- Screwdriver – med. Phillips #2
- Screwdriver – med. straight slot
- Screwdriver -- small straight slot
- Hole saw -- 1 inch (25,4mm)
- Drills -- 9/32 inch (7,2mm) and 7/32 inch (5,6mm)
- Saw (appropriate type of saw for cutting material Control Head will be mounted on)

3.5 PUSH-PULL CABLE

Use Type 33C push-pull cable to the transmission clutch selector lever.

When measuring cable length, measure cable from end of thread to end of thread.

Many transmissions are delivered with factory push-pull cable mounting kits. If mounting kit is not included, contact the transmission dealer for a Factory Cable Connection Kit or refer to the Universal Mounting Figure in the Push-Pull Cable Installation Section of this manual.

3.6 REMOTE SLOW VESSEL SPEED SWITCH

One Remote Slow Vessel Speed ON/Off Switch is required per engine. Others supply switch.

3.7 ENGINE STOP SWITCH

It is mandatory for an Engine Stop Switch to be located at each Remote Station.

WARNING: An Engine Stop Switch at each Remote Station is an absolute requirement, and will cancel warranty if not installed.

3.8 CONTROL SYSTEM POWER

The Processor requires:

- A battery source of 12 or 24 volts DC
- A 5 ampere circuit breaker with manual reset
- Automatic Power Selector (refer to Appendix A - S-214 APS Service Sheet)

The power for the Control System should come from the same power distribution panel as the other required engine functions. (Refer to Appendix C Drawing Notes)

4.0 PLAN THE INSTALLATION

4.1 PROCESSOR(S) LOCATION

NOTE: Read the Warranty in Appendix A. Improper mounting location may cancel warranty.

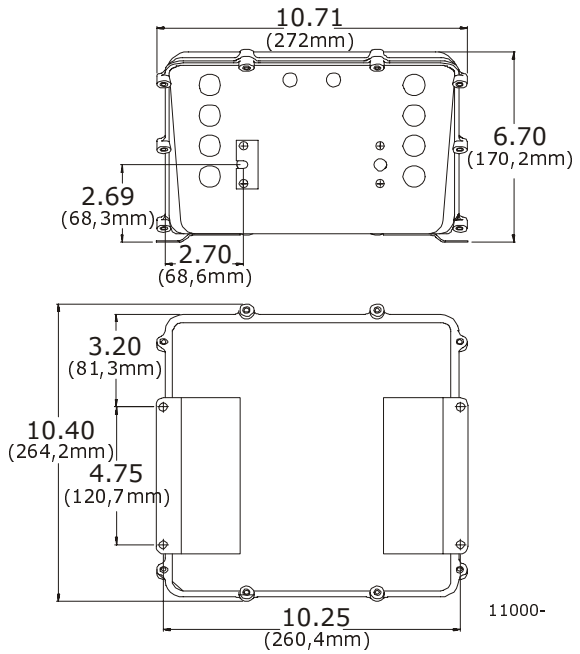

Figure 7: Control Processor Dimensions

Processors are spray proof, but must not be immersed.

An engine room location of the Processor is preferred.

- If the engine room is too small, locate in any area where it is accessible for electrical and push-pull cable connections.

Bulkhead mounting preferred for ease of access for wiring and adjustments, the Processor can be mounted in any attitude.

- If the clutch cable is connected to an I/O drive outside the hull, the Processor must be two feet (0,6m) or more above waterline.

Do not mount the Processor on the engine, to the transmission, or in any location that will subject it to excessive vibration.

Recommendations:

Refer to Figure 7: for Processor dimensions.

Locate Processor(s) away from heat sources, such as engine exhaust manifolds. Allow 4 feet (1,2m) of clearance, or more, between the Processor(s) and such heat sources.

CAUTION: Electro-magnetic fields can influence ClearCommand's electronic circuits.

Do not mount close to gas engine ignition systems, alternators, or electric motors. Allow 4 feet (1,2m) of clearance between the Processor and alternators or electric motors.

The Processor's mounting feet must be connected to the vessel's bonding system.

CAUTION: It is mandatory that the Processor DC negative is bonded (connected) to the vessel bonding system. See Appendix A-1 Bonding Section.

Locate each Processor such that the push-pull cables from it to the transmission have large radius bends, with the least total degrees of bend and moderate length.

NOTE: The minimum bend radius of 10 inches (254mm), for a total degree of bends of less than 270 degrees. Push-pull cable lengths should not exceed 20 feet (6m).

4.2 Control Head Location

Refer to Appendix A-1 Control Head Dimensions and Variations for specific information on a Control Head.

4.2.1 400 Series Control Heads

When properly mounted on a console, the Control Head is watertight from the top. An adhesive gasket must be used to seal the Control Head to the mounting surface. However, below the mounting surface the Control Head needs protection from water or spray.

NOTE: If a Control Head is mounted weather exposed from the underside, consider using a Watertight Enclosure. Reference Appendix A-1 Watertight Enclosure for specific information.

See Appendix A-1 Control Head sheets for mounting dimensions.

4.2.2 MC2000 Series Control Heads

When properly mounted on a console, the Control Head is watertight from the top. An adhesive gasket is mounted on the bottom of the Control Head to seal it to the mounting surface. However, below the mounting surface the Control Head needs protection from water or spray.

NOTE: If a Control Head is mounted weather exposed from the underside, consider using a Watertight Enclosure. Reference Appendix A Watertight Enclosure for specific information.

See Appendix A-1 Control Head sheets for mounting dimensions.

4.2.3 700 Series Control Heads

When properly mounted on a console, the Control Head is watertight.

See Appendix A-1 Control Head sheets for mounting dimensions.

4.3 DC Power Source

It is important to keep the length of power cable short to reduce voltage drop. The power cable should not exceed 20 feet (6m).

If individual wires are used for supply (+) and return (-) then the total wire length should not exceed 40 feet (12m).

CAUTION: It is <u>important</u> that the wire size from the battery to the circuit breaker panel is large enough to keep voltage drop due to current flow, to less than 3 percent. The DC return to the battery must be large enough to supply <u>all</u> current requirements with a voltage drop of less than 3 percent.

It is recommended by ZF Mathers that an Automatic Power Switch (APS) and a second power source be used. Refer to Appendix A-1 - APS Service Sheet and Appendix C-1 System Drawing.

5.0 INSTALLATION

NOTE: Before starting the actual installation of ClearCommand, make sure you have the correct parts and tools on hand. See Section 3. Read ALL the instructions pertinent to each part before beginning the installation of that part.

CAUTION: Static electricity can destroy electronic components. Anytime the Processor cover is off, use the anti-static wrist strap provided and connect it to the Processor frame. This will drain any static charge you may have on your person.

5.1 EIGHT-CONDUCTOR CABLE

A) Install the eight-conductor electric cable between each Control Head and the appropriate Processor.

B) Label each eight-conductor cable at both ends with the station it connects, and Port, Center, or Starboard for Twin or more Screw applications.

When installing the eight-conductor cable, support the cables using clamps or straps not more than 18 inches (0,5m) apart, unless contained in a conduit.

Install each cable so it is protected from physical damage.

5.2 PROCESSOR

A) Secure the Processor using 1/4 inch or M6 fasteners.

B) Remove the Processor cover.

C) Connect the wrist strap to your person, and the ground connector to the Processor frame.

CAUTION: When not working on the Processor, keep the cover in place to prevent damage to circuits.

D) Install the watertight cable grips needed for cable entrance. Refer to Figure 8:.

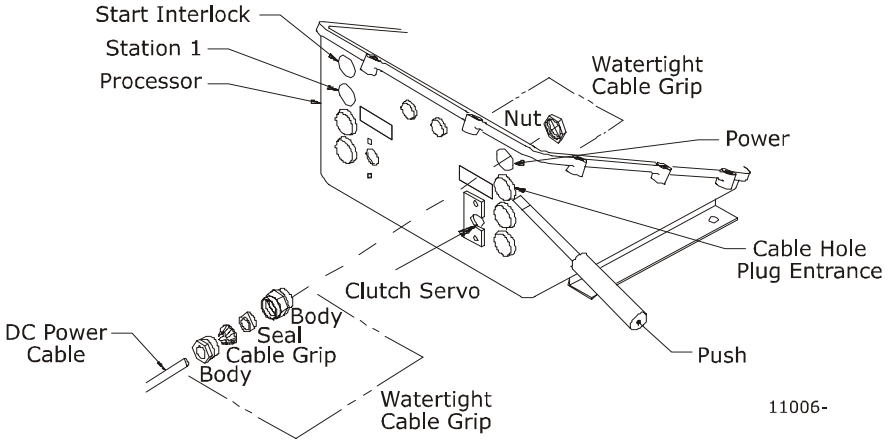

Figure 8: Plug Removal and Cable Grip Installation

5.3 Processor Connections and Set-up

5.3.1 Station Connection

A) Insert cable through the appropriate watertight cable grip.

B) Strip the PVC jacket and shielding back approximately 3 inches (75mm).

C) Stagger wire lead length to match the correct Station terminal strip.

CAUTION: Wire leads must not touch frame.

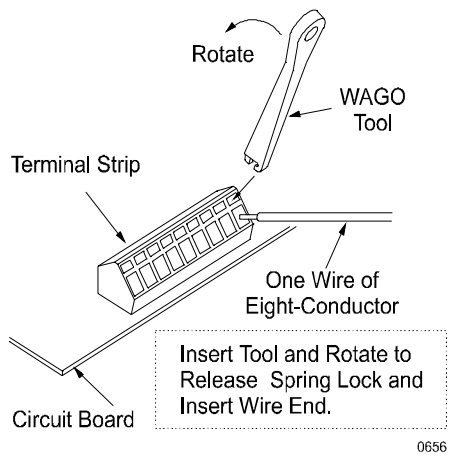

Figure 9: Terminal Connection

D) Strip the wire insulation 3/8-inch (9,5mm) on each wire.

E) Locate the WAGO Tool that is taped to the relay on the circuit board in each Processor. Use this tool to depress the spring lock for the individual wire connections to the terminal strip. (See Figure 9:)

F) Connect colors to the station terminal strips as shown on System Drawing in Appendix C.

G) Connect the shielding drain wire (bare wire) to Terminal 8 on the station terminal strip.

CAUTION: The shielding drain wire MUST NOT touch any other components.

H) Feed through a little slack cable, and tighten the cable grip on the eight-conductor cable.

NOTE: Bring the other Station's eight-conductor cables in the same way, and connect to the appropriate station terminal strips. (Refer to Drawing in Appendix C)

I) Tie wrap the Station cable to the Processor frame.

CAUTION: A jumper is required between terminals 5 and 6 on all unused station terminals on the circuit board. Refer to Drawing Notes in Appendix C.

5.3.2 Power Cable

WARNING: When connecting the DC power cable to the Processor be sure the power is OFF.

A) Run the length of two-conductor power cable between the DC Power Supply and the Processor.

B) Install the power cable grip in the Processor enclosure. (refer to Figure 5:)

C) Connect the two-conductor cable to the Processor. Refer to the Drawing in Appendix C for power connection points.

D) Feed through a little slack cable and tighten the cable grip.

E) Tie wrap the power cable to the Processor frame.

NOTE: Repeat for all Processors. Ensure all connections are as indicated on the Drawing in Appendix C.

5.3.3 Start Interlock

CAUTION: The Processor is designed for a maximum of 30 amperes, maximum 50 volt, start signal current. Greater current will damage the interlock circuit.

Run the length of two-conductor start interlock cable between the Starter Solenoid and the Processor. (Refer to Figure 10:)

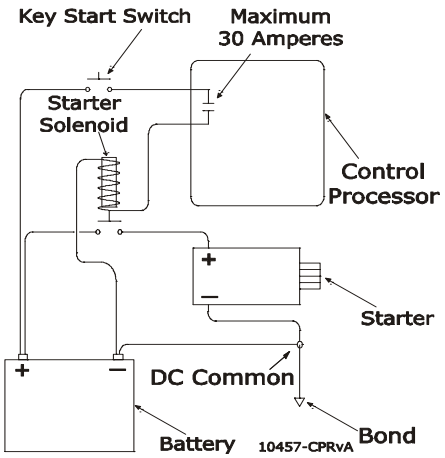

Figure 10: Start Interlock Connections

Connections at Starter Solenoid:

A) Remove the remote start switch lead from the Starter Solenoid.

B) Strip and connect one start interlock cable wire to this lead.

C) Strip and connect the second start interlock cable wire to the Starter Solenoid

Connections at Processor:

A) Install the start interlock grip in the Processor enclosure. (refer to Figure 5:)

B) Run the two-conductor start interlock cable through the watertight cable grip.

C) Strip insulation off of each wire 3/8-inch (9,5mm), then install crimp terminals.

D) Connect the two-conductor cable as indicated on the Drawing in Appendix C.

E) Feed through a little slack cable and tighten the cable grip.

F) Tie wrap the start interlock cable to the Processor frame.

CAUTION: The most common source of trouble is loose wiring connections. Verify wiring connectors are properly crimped and cannot be pulled out. Crimps and connections must be made to the wire, not to the wire insulation. Verify all screwed wire connections are secure.

NOTE: Repeat for all Processors. Ensure all connections at the Processor are as indicated on the Drawing in Appendix C.

5.4 CONTROL HEADS

See Appendix A Control Head Dimensions and Variations for location of cutout and mounting holes for the Control Heads used with this application. Refer only to the following Sections that relate to the Control Heads used.

5.4.1 Mounting

400 Series Control Head:

A) Use the template supplied in Appendix A and drill the screw holes and the corner cutout holes.

B) Saw between the corner cutout holes.

C) Check that the four mounting screws will start into the Control Head.

D) Remove the Control Head.

E) Strip the adhesive cover from the gasket and apply the adhesive side to the console.

700 Series Control Head:

A) Drill the screw holes and the cable holes.

B) Remove the six screws holding the bottom cover of the Control Head housing and set aside. (Refer to Appendix A Control Head Variations sheet)

C) Run the eight-conductor cable through the correct cable grip in the bottom cover

CAUTION: For Twin Screw applications, Port cable to Port side of Control Head, Starboard cable to the Starboard side of Control Head.

MC2000 Series Control Head:

A) Use the template supplied in Appendix A and drill the screw holes and the corner cutout holes.

B) Saw between the corner cutout holes.

C) Check that the two mounting screws will start into the Control Head.

5.4.2 Cable Connection

Refer to Appendix A Control Head Variations Sheet for the Control Heads being used with this application.

A) At the Control Head, strip back the PVC jacket on the eight-conductor cable approximately 2-1/2 inches (63,5mm).

B) Strip and cut off the shielding and drain wire flush with the end of the PVC jacket.

CAUTION: Do not connect the drain wire at the Control Head to ground.

C) Strip 3/8-inch (9,5mm) insulation off each wire, then install crimp terminals.

CAUTION: Connections 5 and 7 at the terminal block are direction sensitive.

Port Lever:		Starboard Lever:	
Terminal 5	Blue	Terminal 5	Yellow
Terminal 7	Yellow	Terminal 7	Blue

5.4.3 Aft Facing Control Heads

Refer to Figure 11:.

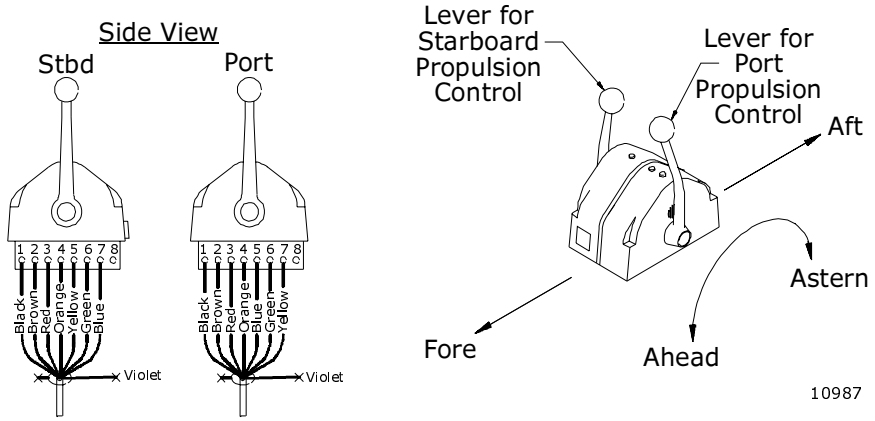

Figure 11: Aft Facing Control Heads

For dual lever Control Head Stations that have the user facing aft:

- Reverse connections 5 and 7.
- If the synchronization option is being used, ensure the violet wire is connected on the Control Head side that is commanding the Starboard Processor.

For single lever Control Head Stations that have the user facing aft and the single Control Head lever on the user's right, reverse connections 5 and 7.

5.4.4 700 Series Control Head Only

When cable connections are complete, replace the bottom cover with the six screws removed earlier. Ensure seal is in place.

5.5 Engine Stop Switch

The Installer supplies the Stop Switches. Refer to the information supplied with the Stop Switches for installation.

WARNING: Each Station must have some method to stop the engine. Warranty canceled if requirement not followed.

5.6 MAIN ENGINE SPEED CONTROL

Refer to the appropriate Drawing in Appendix C for interface connections. Review the engine manuals to confirm termination points and terminal numbers.

NOTE: The Drawing in Appendix C includes the correct connection for Primary Throttle and Secondary Throttle to utilize the Caterpillar Synchronization feature. A Installer furnished three position switch is required to be connected to SYNCH 1 and SYNCH 2 Pins, as shown in the Caterpillar Installation Guide.

CAUTION: Do not make any connections other than those shown on the Drawing in Appendix C to the Trolling Valve Activation Pins on Caterpillar ECM.

5.7 PUSH-PULL CABLES

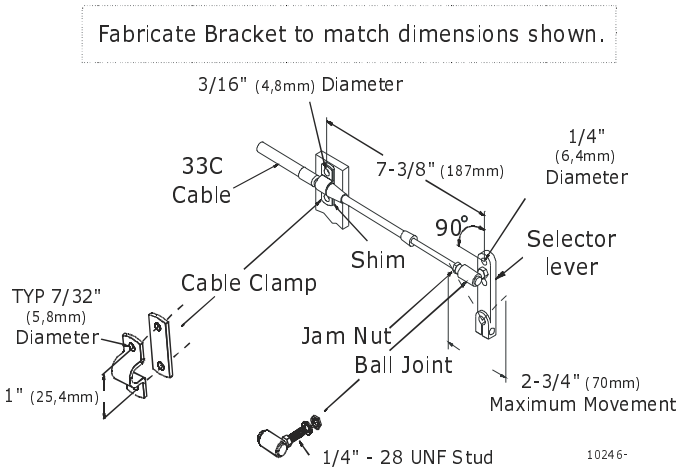

Figure 12: Universal Mounting

The Processor interconnects with the transmission by push-pull cable to operate the clutch selector lever. The maximum load rating is 30 pounds force and 3-inches (7,62 cm) maximum movement of the push-pull cable.

Verify installation of push-pull cable brackets on the transmission. If the brackets are missing, fabricate brackets as shown in Figure 12:

A) Remove the Number 10-32 jam nut and the two rubber seals from the push-pull cable end that is to connect to the Processor. Discard seals.

B) On the Processor housing, remove one screw from the cable retainer clip.

C) Loosen the remaining screw and swing the cable retainer clip away from the entry hole.

D) Insert the push-pull cables through the entry hole.

E) When the push-pull cable end is visible within the Processor interior, reinstall the Number 10-32 jam nut.

F) Connect the push-pull cable to the hex nut (See Figure 13:, Detail I). Use a 7/16-inch socket to turn the hex nut onto the cable rod end until there is approximately 5/16 inch (7,9mm) of thread showing beyond the jam nut.

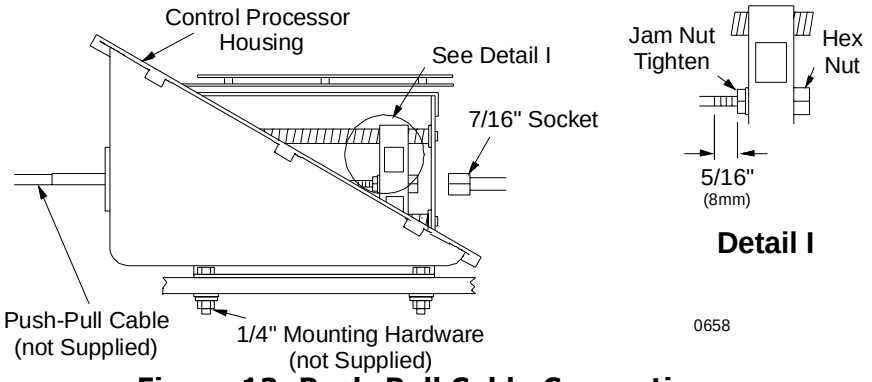

Figure 13: Push-Pull Cable Connection

G) Tighten the jam nut to the hex nut.

H) Reinstall the cable retainer clip to secure the push-pull cable to the Processor housing.

I) Run the push-pull cable to the transmission. Insure the correct push-pull cable is ran to the correct selector lever. Refer to the System Drawing in Appendix C-1 and to Figure 8:, page 17.

J) Do not connect the push-pull cable at this time.

5.8 REMOTE SLOW VESSEL SPEED SWITCH

Refer to the manufacturers data supplied with the Remote Slow Vessel Speed Switch. Locate switch between TB5-4 and the slow vessel speed pin on the Caterpillar ECM. Refer to Appendix C-1 Drawing and Caterpillar Manuals.

6.0 ADJUSTMENTS AND TESTS (SECURED TO DOCK)

6.1 CONTROL HEAD (ENGINES STOPPED)

A) Turn the power ON to the control system.

WARNING: Keep hands and tools clear of the Processor when power is ON. Turn OFF the control system power before disconnecting from the batteries. Do not disconnect battery terminals when engine is operating.

B) The Control Head at each station will produce an intermittent tone.

C) Take command at a remote station.

D) Perform each of the following steps on all Control Heads.

1. Move each Control Head lever full Ahead and full Astern. Ensure Processor reacts to lever movement.

NOTE: This will check that the Control Head is operating.
*** On Twin Screw applications ensure the Port Control Head lever operates the Port Processor and the Starboard Control Head lever operates the Starboard Processor. ***

2. Place the Control Head levers in the Neutral/Idle detent position.

3. Depress and hold the station transfer button.

4. Move the Control Head levers to the Ahead detent position before releasing the transfer button.

5. The red indicator light on the Control Head should blink, indicating ClearCommand has been placed in Warm-up Mode. Warm-up Mode Mode only operates in the Ahead direction.

   - If the red indicator light blinks, continue with Control Head testing
   - If the red indicator light does not blink, check connections as stated in Section 5.4.

6.2 START INTERLOCK TEST AND ADJUSTMENTS (ENGINES STOPPED)

NOTE: If any of the following tests fail, verify Start Interlock Installation and Start Interlock connections as shown on the Drawing in Appendix C and in 5.3.3, page 17.

A) Turn the ClearCommand DC power OFF.
- Verify that the engine(s) will not start.

B) Turn the ClearCommand DC power ON. Do not take command at a Station.
- Verify engine(s) will not start.

C) Take command at a Station. Place the Control Head lever(s) to 50 percent throttle.
- Verify engine(s) will not start.

D) Place the Control Head lever(s) in the Neutral/Idle detent (vertical) position. Take command at a Station.
- Verify engine(s) will start in this position

6.3 CLUTCH CABLE ADJUSTMENT (ENGINES STOPPED)

A) Move the clutch selector lever on the transmission from the Ahead position to the Astern position, measuring the length of cable travel required.

CAUTION: The total cable travel must be within 2 inches (51mm) to 3 inches (76mm).

B) Transfer command to the remote station you will be working from.

C) Leave the Control Head lever in the Neutral/Idle detent position.

D) Adjust the clutch cable ball joint at the transmission to match the clutch selector lever in the Neutral position.

NOTE: The push-pull cable must form a right angle (90 degrees) with the clutch selector lever in the Neutral position.

E) Leave the clutch cable disconnected.

F) Move the Control Head lever to the Ahead detent.

CAUTION: The Processors are shipped with the Dip Switches set for minimum cable movement.

G) If cable needs adjustments see Appendix C-1 Drawing Notes for Dip Switch settings to achieve required clutch cable adjustment travel.

H) When required cable travel for Ahead is achieved, complete the same process to verify Astern adjustment travel.

I) Once Ahead and Astern adjustments are complete, verify all three positions; Ahead; Neutral; and Astern.
- If cable travel is correct at all three positions, continue with the next step.
- If cable travel is incorrect, review steps A) through I), making the necessary adjustments.

J) Connect the clutch cable at the transmission.

K) Confirm that the Processor does not jam the clutch selector lever against its stops, and that Neutral is correct.
- If the Processor moves the push-pull cable correctly for all positions, continue with the next Section.
- If the Processor jams the clutch selector lever against its stops, disconnect the clutch cable at the transmission and review steps A) through K), making the necessary changes.

6.4 THROTTLE PAUSE (ENGINES STOPPED)

Hydraulic actuated clutches require 1/2 second, or longer, following clutch selector lever movement before there is clutch plate contact.

Some clutches may build clutch pressure more slowly. This could mean high engine RPM before clutch engagement. The optional Clutch Oil Pressure Switch will ensure sufficient clutch oil pressure, before allowing speed to the governor.

Dip Switch SW1-7 on the Processor main circuit board adjusts the Throttle pause. (Refer to the Drawing in Appendix C for Dip Switch location and Settings)

6.5 Engine Stop Switches Test (Engines Running)

A) Start engine(s).

B) Verify that all Engine Stop Switches function correctly at all stations.

Refer to information supplied by engine manufacturer or switch supplier for set-up and adjustments.

CAUTION: An Engine Stop Switch at each station is an absolute requirement, and will cancel warranty if not installed.

WARNING: Do not attempt to continue tests until Engine Stop Switches function correctly.

6.6 Warm-Up Mode Test (Engines Running)

NOTE: Use Warm-up Mode on each engine at each Station, one engine at a time to confirm speed command.

A) Place the Control Head lever(s) in the Neutral/Idle (vertical) position.

B) Depress and hold the station transfer button.

C) Move the Control Head lever(s) to the Ahead detent position.

D) Release the station transfer button.

- If the red indicator light blinks, Warm-up Mode has been activated. Continue with Adjustments and Tests.

- If the indicator light does not blink, refer to Section 5.4 and verify all connections are correct. Make any necessary changes and then repeat this Section.

6.7 High Idle Mode Adjustment and Test (Engines Running)

A) Take command at a remote station.

B) Place the station in Warm-up Mode.

NOTE: High Idle adjustments are made while in Warm-up Mode. Low Idle Mode needs no adjustment.

C) Locate trim pot R7 on the Processor main circuit board. Refer to the Drawing in Appendix C-1 for trim pot location.

D) Verify engines are running.

E) Turn trim pot R7 clockwise ↻ while monitoring the engine RPM. Adjust to the desired High Idle RPM.

F) Once desired High Idle RPM has been achieved, return the Control Head lever to the Neutral position.

G) Repeat this process on all Processors.

H) To verify High – Low Idle Mode, place the Control Head lever(s) in the Ahead position

I) Depress the station transfer button.

NOTE: Every time the station transfer button is depressed while in the Control Head lever is in the Ahead detent the engine Idle should toggle from High to Low Idle Mode or Low to High Idle Mode.

- If the Idle toggles, continue with adjustments underway.
- If the Idle does not toggle, repeat A) through I).

7.0 ADJUSTMENT UNDERWAY

WARNING: DO NOT attempt to operate ClearCommand away from the dock with any system abnormality. Verify that all the above tests are completed and are correct.

CAUTION: Start slowly and learn to appreciate that the ClearCommand System provides a light touch that is fast and accurate.

7.1 ENGINE RPM

A) Use Warm-up Mode to warm-up the engine(s).

B) In open water gradually move the Control Head lever to full-speed. Engine(s) should be running at full rated RPM.

C) Consult the engine operator's manual for additional RPM adjustments.

7.2 PROPORTIONAL PAUSE ON DIRECTION CHANGE

This feature allows for engine deceleration and vessel speed to decrease on a High Speed Reversals.

The throttle setting drops to Idle and the transmission remains engaged during this pause.

See Drawing Notes for Dip Switch Settings to adjust the Proportional Pause.

NOTE: The pause is in proportion to Control Head lever position, and how long the Control Head lever had been in that position before the High Speed Reversal.

- The times listed in the Appendix C-1 Drawing Notes are maximum.
- Shifting from Idle Ahead to Idle Astern, the pause is zero.
- The time required to build to the maximum pause is six times the pause listed in the Appendix C-1 Drawing Notes.
- The pause from full-Astern to Ahead is half that listed in the System Drawing Notes for full-Ahead to Astern.

8.0 CONTROL OPTIONS

8.1 ALARM CAPABILITY

ClearCommand offers a single alarm connection that OPENS with a system power failure or circuit malfunction.

The Processor's alarm connection point is a single connection block on each Processor Circuit Board. The alarm circuit in the Processor operates an alarm system supplied by others.

The control failure alarm is rated for a maximum of 200 mA. Do not exceed this rating. Normal operation is 21 ohms to DC return, high impedance indicates Alarm Condition.

It is the Shipyard's responsibility to utilize the alarm connection in an appropriate alarm circuit that has the same common mode voltage.

8.2 CLUTCH OIL PRESSURE INTERLOCK

NOTE: A Jumper is installed on the Auxiliary Board, in place of the Pressure Switch connections. If Clutch Oil Pressure Switch is used, remove this Jumper. Refer to Appendix C-1 Drawing Notes for details on Jumper.

The purpose of the Clutch Oil Pressure Interlock is to prevent high engine RPM when the clutch is not fully engaged. The interlock will block a speed signal to the engine until the hydraulic clutch pressure has reached a value recommended by the transmission manufacturer that ensures clutch engagement.

- The pressure switch is Installer supplied.
- The requirement is a N.O. (Normally Open) pressure switch with a trip point adjustable to match the transmission manufacturers recommended setting.
- The hydraulic clutch pressure of either the Ahead or Astern clutch must operate the pressure switch.
- When contacts close, this indicates to the Processor when the clutch is sufficiently engaged to allow a speed command

above Idle speed. It is a safety feature that protects the clutch and its use is recommended.

If the clutch pressure should fall below the pressure switch setting, the engine speed will drop to Idle RPM.

The Factory places a jumper between the two clutch oil pressure switch connections on the Processor before shipment. Remove this jumper when connecting the clutch oil pressure switch. Refer to Appendix C Drawing for specific details.

9.0 MAINTENANCE

9.1 CONTROL PROCESSOR

The ClearCommand Processor requires the following annual checks:

- Check all terminal connections for signs of corrosion or loose connections.
- Check mechanical connections within the Processor, and at the transmission.
- Check mechanical movement of the clutch selector lever. Ensure that the cable does not jam while positioning the clutch selector lever.
- Cycle the Processor and if lead screws are noisy, apply a light coating of silicone grease to the stainless steel lead screw.

9.2 CONTROL HEAD

Verify once a year that Control Head terminals are secure and free of corrosion. Apply a light coating of Teflon grease, or corrosion block, to the contacts.

APPENDIX A.1

PARTS LIST

PART NO.	DESCRIPTION

CONTROL HEADS

SINGLE SCREW

450-3L or 3R	Left or Right Control Head, 'T' Lever
453-3L or 3R	Left or Right Control Head, Chrome Knob Lever
455-3L or 3R	Left or Right Control Head, Black Low Profile Lever
456-3L or 3R	Left or Right Control Head, Chrome Low Profile Lever
750-L or –R	Left or Right Control Head, Heavy Duty

TWIN SCREW (Synchronization Indication)

460-4	Control Head, 'T' Lever
463-4	Control Head, Chrome Knob Lever
464-4	Control Heads, Split, with Single Levers, Chrome Knobs (pair)
465-4	Control Head, Black Low Profile Lever
466-4	Control Head, Chrome Low Profile Lever
760	Control Head, Heavy Duty
MC2000-1	Black Head, Black Levers
MC2000-2	Chrome Head, Chrome Levers
MC2000-3	Gold Head, Gold Levers
MC2000-4	Black Head, Chrome Levers
MC2000-5	Black Head, Gold Levers
MC2000-6	Black Titanium Head, Black Levers

CABLE (Electric)

180	8-Cond. Shielded Cable	Per/ft
350	8-Cond. Shielded Cable	500' Spool
11811	8-Cond. Shielded Cable	1000’ Spool
212	2-Cond. Power Cable	Per/ft
349	2-Cond. Power Cable	250' Spool
183	2-Cond. Start Interlock Cable	Per/ft
355	2-Cond. Start Interlock Cable	250' Spool

ZF Mathers, LLC
1415 Pacific Drive
Burlington WA 98233-3103 U.S.A.
800-546-5455 / 360-757-6265
Fax: 360-757-2500

MMC-280 Rev.F 11-00

MicroCommander, ClearCommand 400 & MC2000 Control Head Variations

450 - 460 Series

Chrome Lever with Knob

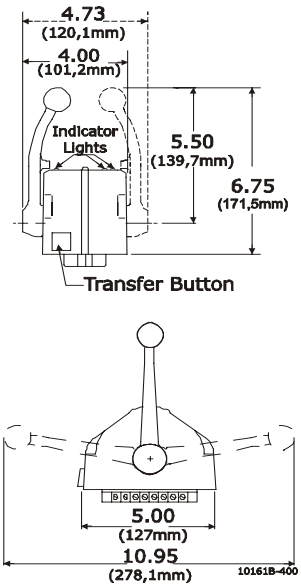

Low Profile Lever

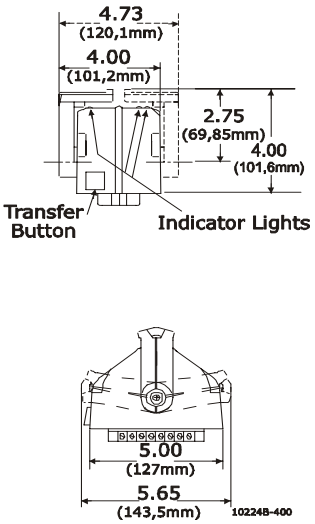

Standard 'T' Handle

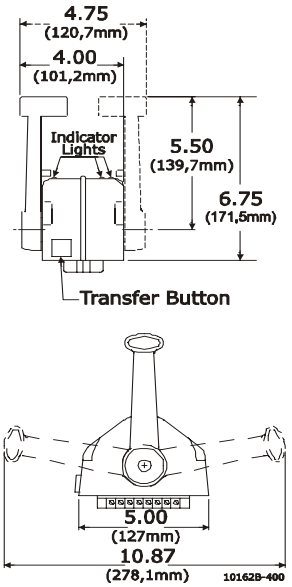

MC2000 Series

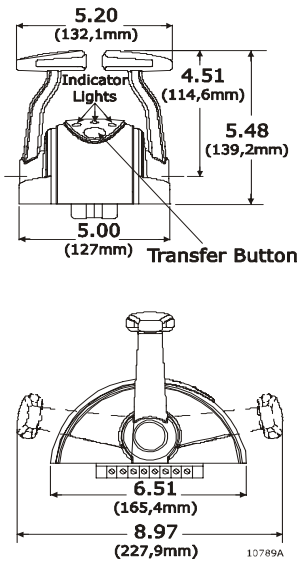

TEMPLATES

450 - 460 Series

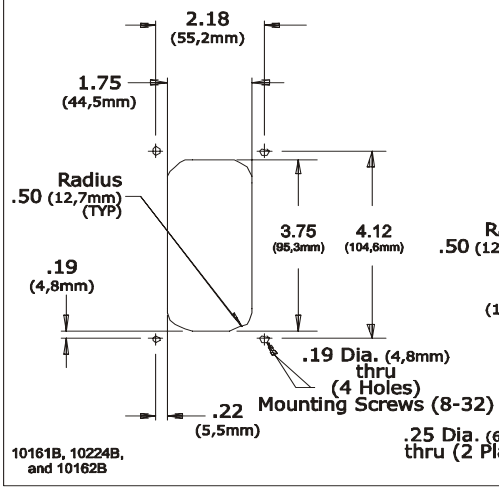

MC2000 Series

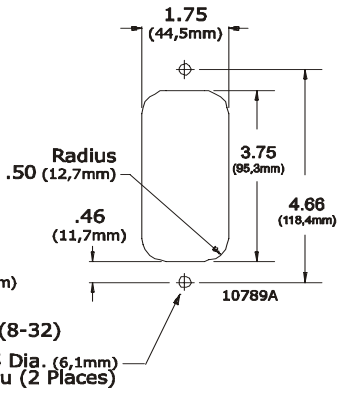

450 - 460 Series and MC2000 Series

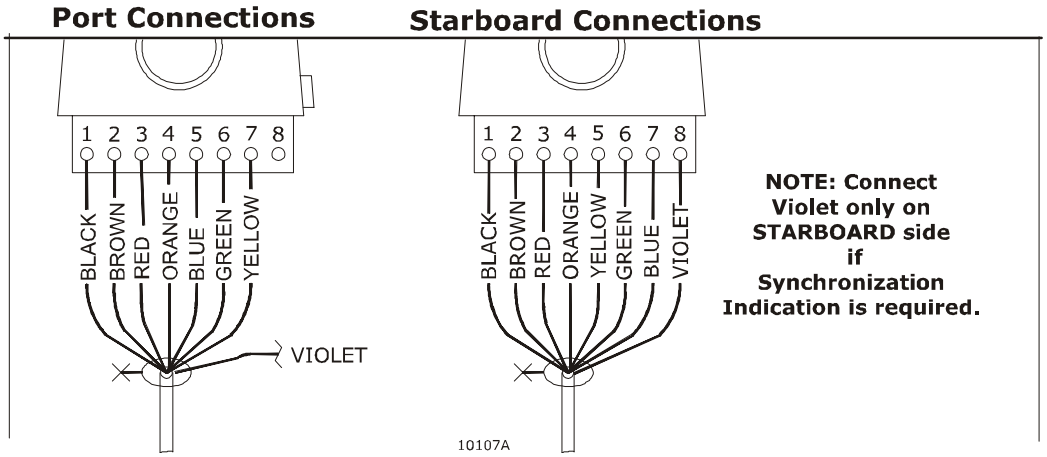

Standard Cable Connections

At the Control Head, strip back the PVC cover on the shielded cable approximately 2" (50mm).

Strip and cut off the shielding and drain wire flush with the end of the PVC cover (the drain wire at the Control Head is not connected to ground).

Strip 3/8" (9,5mm) insulation off each wire.

Twist the individual strands of the wires to minimize fraying.

Crimp a locking fork terminal (included with each Control Head) to each of the conductors.

Make connections to the Control Head as shown above.

Hand Held Control is a Station option. Contact your Mathers Dealer for further information on Hand Held requirements and options.

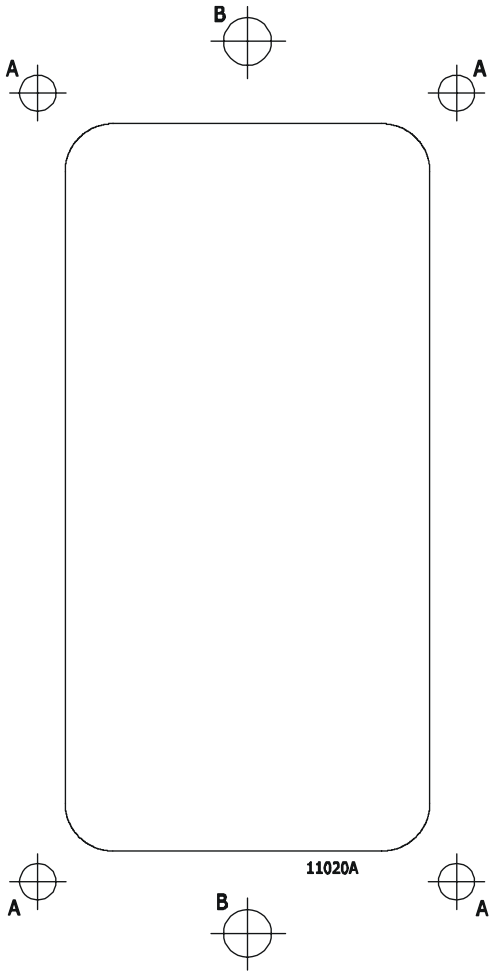

"A" HOLES 450 - 460 SERIES: ø.19

"B" HOLES MC2000 SERIES: ø.25

.

ZF Mathers, LLC
1415 Pacific Drive
Burlington WA 98233-3103 U.S.A.
800-546-5455 / 360-757-6265
Fax: 360-757-2500
e-mail: zfmathers@zf.com

MMC-307 Rev.B 11-00

ClearCommand
700 Series Control Head Sheet

750 - 760 Series Front View

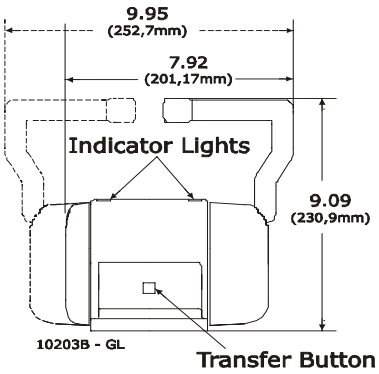

750 - 760 Series Side View

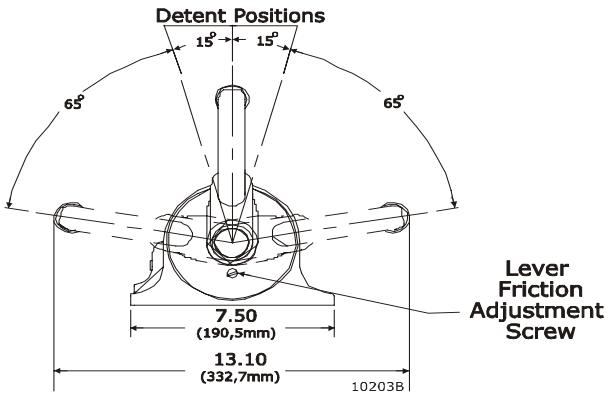

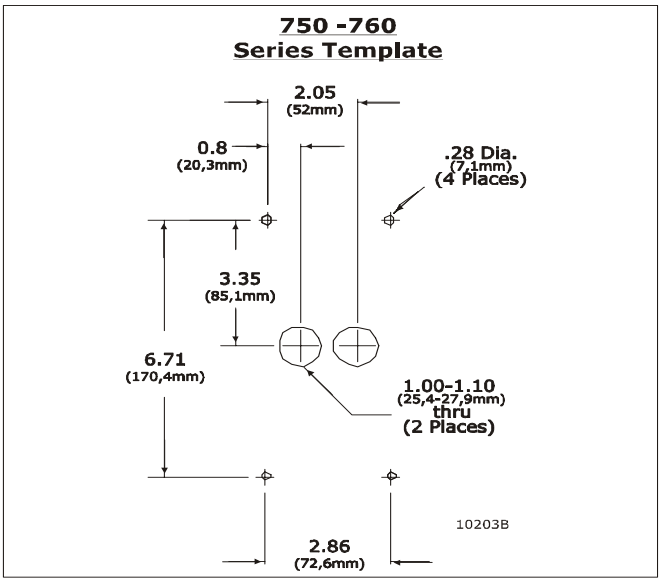

Standard Cable Connections

A) Remove the bottom cover from the Control Head.

B) Insert electrical cable through watertight cable grip(s) in Control Head bottom cover.

C) Strip back the PVC cover on the shielded cable approximately 2" (50mm).

D) Strip and cut off the shielding and drain wire flush with the end of the PVC cover (the drain wire at the Control Head is not connected to ground).

E) Strip 3/8" (9,5mm) insulation off each wire.

F) Twist the individual strands of the wires to minimize fraying.

G) Crimp a locking fork terminal (included with each Control Head) to each of the conductors.

H) Make connections to the Control Head as shown below.

I) When connections are complete, replace the bottom cover to the bottom of the Control Head housing.

NOTE:	**On 750 Series Control Heads use one of the bottom cover screws to connect to the ship's bonding system.**

J) Tighten watertight cable grip(s).

750- 760 Series Connections

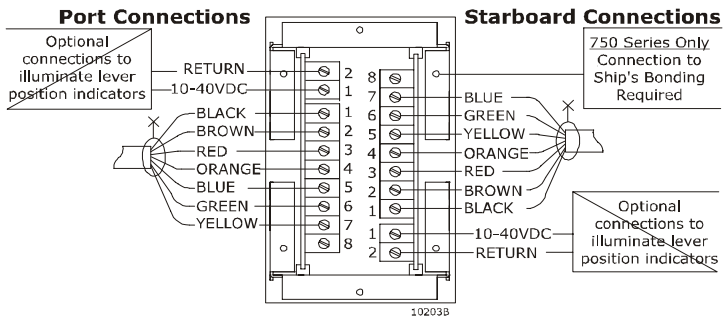

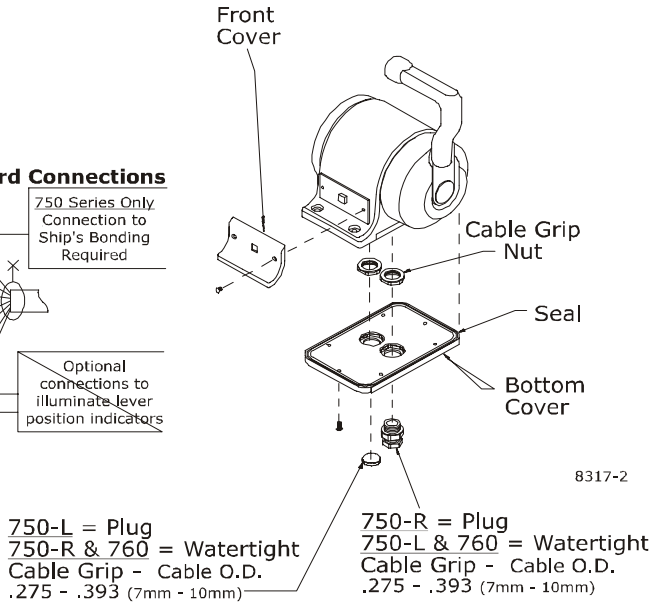

Bottom Panel Assembly

Mounting

A) Select mounting location and drill mounting holes as shown in the template on the front page.

B) Remove front cover from the Control Head

C) Mount Control Head with supplied hardware.

D) Replace front cover when mounting is complete.

ZF Mathers, LLC
1415 Pacific Drive
Burlington WA 98233-3103 U.S.A.
800-546-5455 / 360-757-6265
Fax: 360-757-2500
e-mail: zfmathers@zf.com

MMC-310 Rev.C 12-00

MicroCommander, ClearCommand 464-4 Control Head Sheet

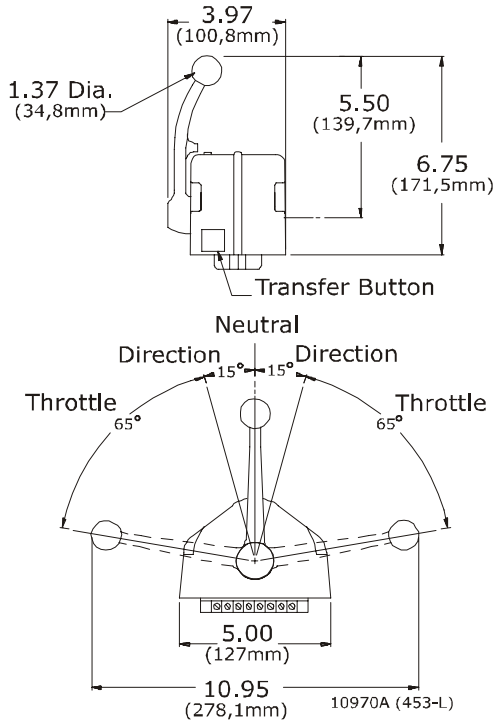

453-3L

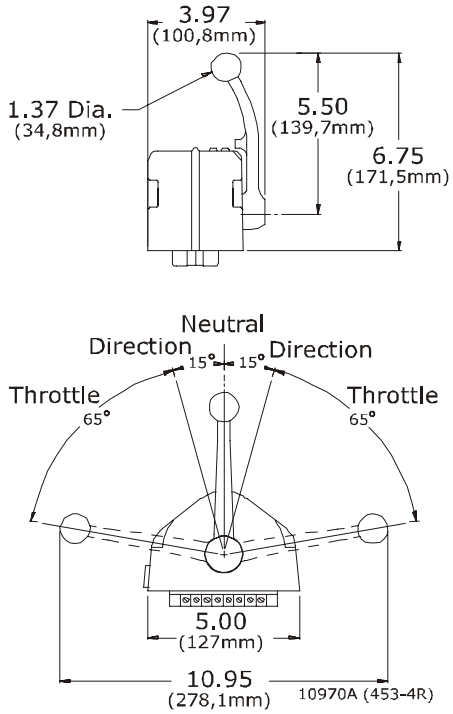

453-4R

Standard Cable Connections

Select the desired mounting locations and drill holes per template.

Run cables between Actuator/Processor and Control Head.

At the Control Head, strip back the PVC cover on the shielded cable approximately 2" (50mm).

Strip and cut off the shielding and drain wire flush with the end of the PVC cover (the drain wire at the Control Head is not connected to ground).

Strip 3/8" (9,5mm) insulation off each wire.

Twist the individual strands of the wires to minimize fraying.

Crimp a locking fork terminal (included with each Control Head) to each of the conductors.

Make connections to the Control Heads as shown below.

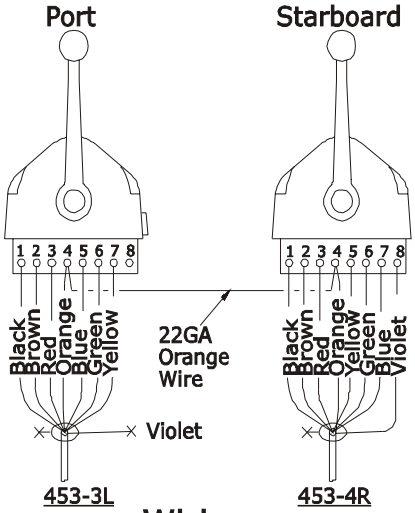

Wiring

10970A (464-4)

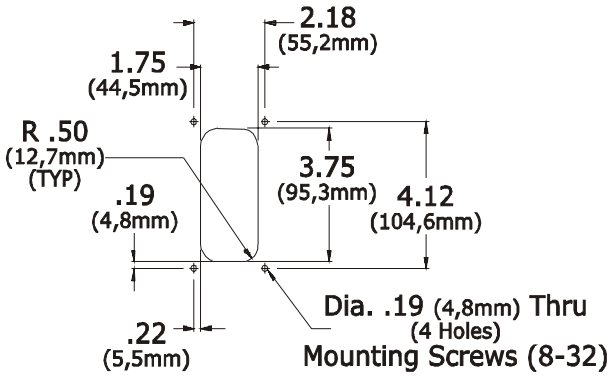

Template

10970

.

ZF Mathers, LLC
1415 Pacific Drive
Burlington WA 98233-3103 U.S.A.
800-546-5455 / 360-757-6265
Fax: 360-757-2500
e-mail: zfmathers@zf.com

MMC-279 Rev.A 11-00

MicroCommander/ClearCommand 400 Series Watertight Enclosure

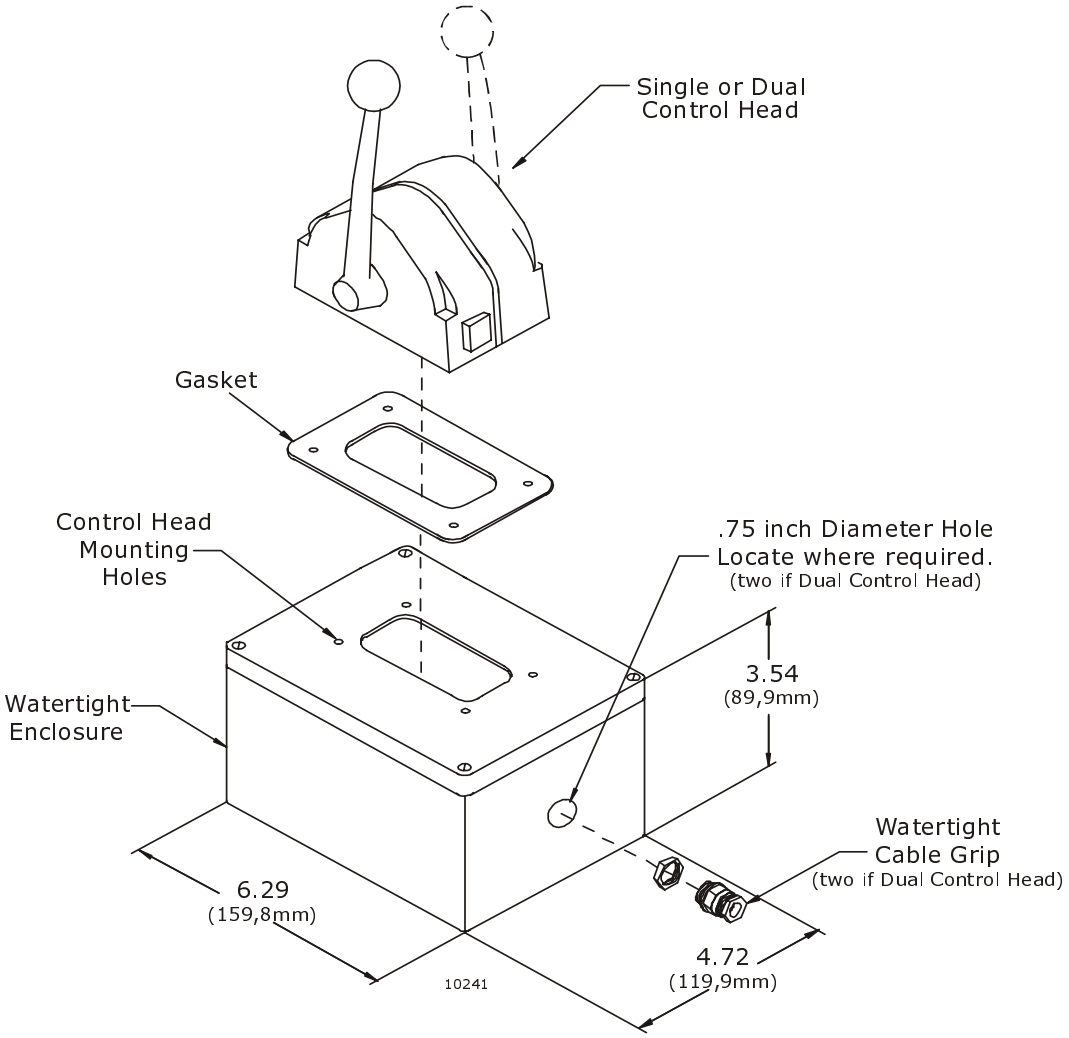

Deck Mount or Exposed Mount

Ideal for outside Weather Mount

To prevent internal condensation and moisture build up the mount is drilled to allow air circulation.

Part No. 12110

.

ZF Mathers, LLC
1415 Pacific Drive
Burlington WA 98233-3103 U.S.A.
800-546-5455 / 360-757-6265
Fax: 360-757-2500

S-214 Rev.- 1/01

MicroCommander, ClearCommand, MasterCommand Automatic Power Selector (APS) Model: 13505

A) GENERAL INFORMATION

The APS (Automatic Power Selector), Model 13505, provides a simple, solid state solution to the need for routing redundant DC power sources for vital electronic equipment while maintaining isolation of the DC power sources.

Two independent batteries rated at the same nominal voltage are wired to separate terminals on the APS and internal diodes maintain total isolation between them. A single output terminal is wired to the ZF Mathers Propulsion Control System.

The APS is rated for loads of up to 70 Amps on 12-24V systems. The unit is ruggedly constructed with heavy-duty wiring studs and epoxy-potted components in an anodized aluminum case.

B) APS SPECIFICATIONS

Model: 13505

Maximum Load Current: 70 amps

Operating Temperature: -40 degrees C to +80 degrees C; derate linearly from 100% @ 50 degrees C to 70% @ 80 degrees C

Voltage Drop: 0.7 VDC @ 50% load; 0.9 VDC @ full load

Dimensions: 3.25" x 4.5" x 3.1" (8,3 x 11,4 x 7,9 cm)

C) MATERIALS PROVIDED

The APS is supplied with a hardware packet containing (8) hex nuts, (4) lock washers, (6) self-tapping mounting screws, (1) nut instructions diagram.

NOTE: **Not all of the hardware will be used in the installation; some spares are provided. Nut size is M-6.**

D) INSTALLATION

Refer to the installation diagram Figure 1:.

1. Shut off all charging sources and disconnect the negative (ground) side of each battery which will be wired to the APS.
2. Mount the APS in a suitable location which will keep wire runs to a minimum length, and is (preferably) ventilated, for cooler operation. The case of the APS is electrically isolated from the internal diodes, so mounting on either a metal or non-metal surface is acceptable. Complete the wiring as shown on Page 2.
3. Reconnect the negative battery posts.

E) IMPORTANT NOTE ABOUT BATTERY SOURCES

Whenever the load is turned on, it can be drawing power from the batteries. Therefore, if the batteries are not simultaneously being recharged, or if charging will not be available for an extended period, it is recommended that the load be shut off to prevent complete discharge of batteries.

F) INSTALLATION DIAGRAM

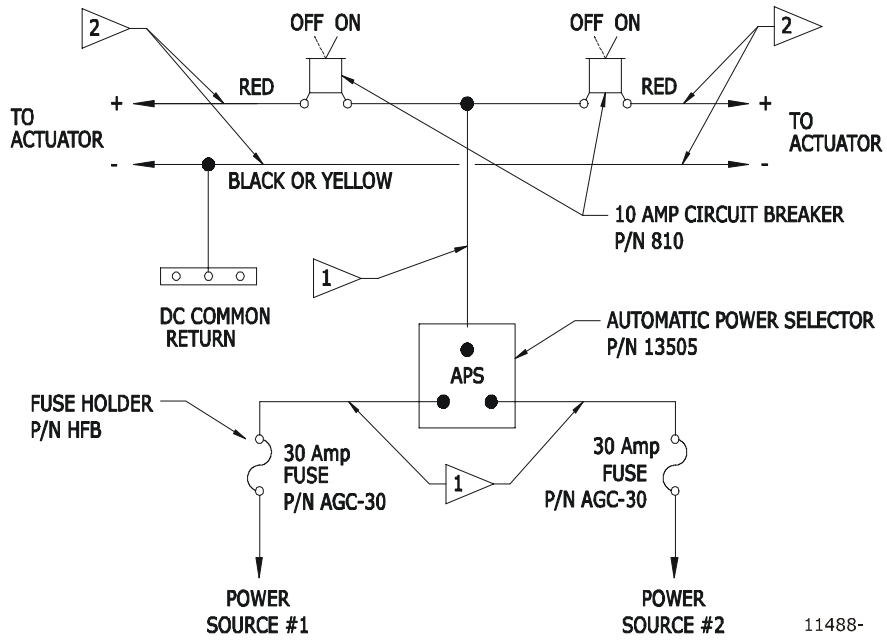

Flag 1: Wire Size (Ref ABYC E9.15.9 10%)

0-15′ 12 AWG (#3 Metric Equivalent)
15′-30′ 10 AWG (#5 Metric Equivalent)
30′-60′ 8 AWG (#8 Metric Equivalent)

Flag 2: Wire Size (Recommended Twisted Pair)

0-20′ 14 AWG (#2 Metric Equivalent)
20′-40′ 12 AWG (#3 Metric Equivalent)

Note:

1. APS output is strictly for ZF Mathers Controls
2. Power Sources may be 12 or 24 volts DC

Figure 1:

A.P.S. (Auto Power Selector) Kits

Twin Screw	Single Screw	Include the following:
13983	13984	

Quantity		Description	Part Number
1	1	A.P.S. Unit	13505
2	1	10 amp Switch Circuit Breaker	810
2	2	Fuse Holder In-Line	HFB
2	2	30 Amp Fuse	AGC-30

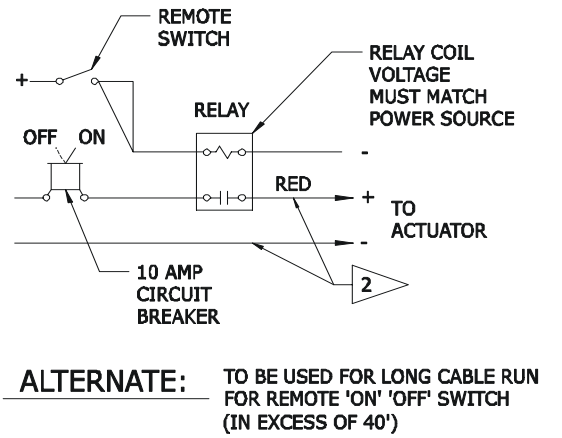

Figure 2:

ZF Mathers, LLC
1415 Pacific Drive
Burlington WA 98233-3103 U.S.A.
800-546-5455 / 360-757-6265
Fax: 360-757-2500
e-mail: zfmathers@zf.com

MMC-287 Rev.A 4-00

MicroCommander, ClearCommand, MasterCommand Bonding - A.B.Y.C. 46 CFR 111.05

All boats equipped with a permanently installed electrical system shall also be equipped with a bonding system. The negative terminal of all batteries should be connected at only one point, the DC common, and from DC common to bond system or hull.

Metal - Hull Vessels

The hull of a metal - hull vessel may serve as the common bonding conductor. Any item to be bonded not in contact with the hull requires a bonding conductor to the hull.

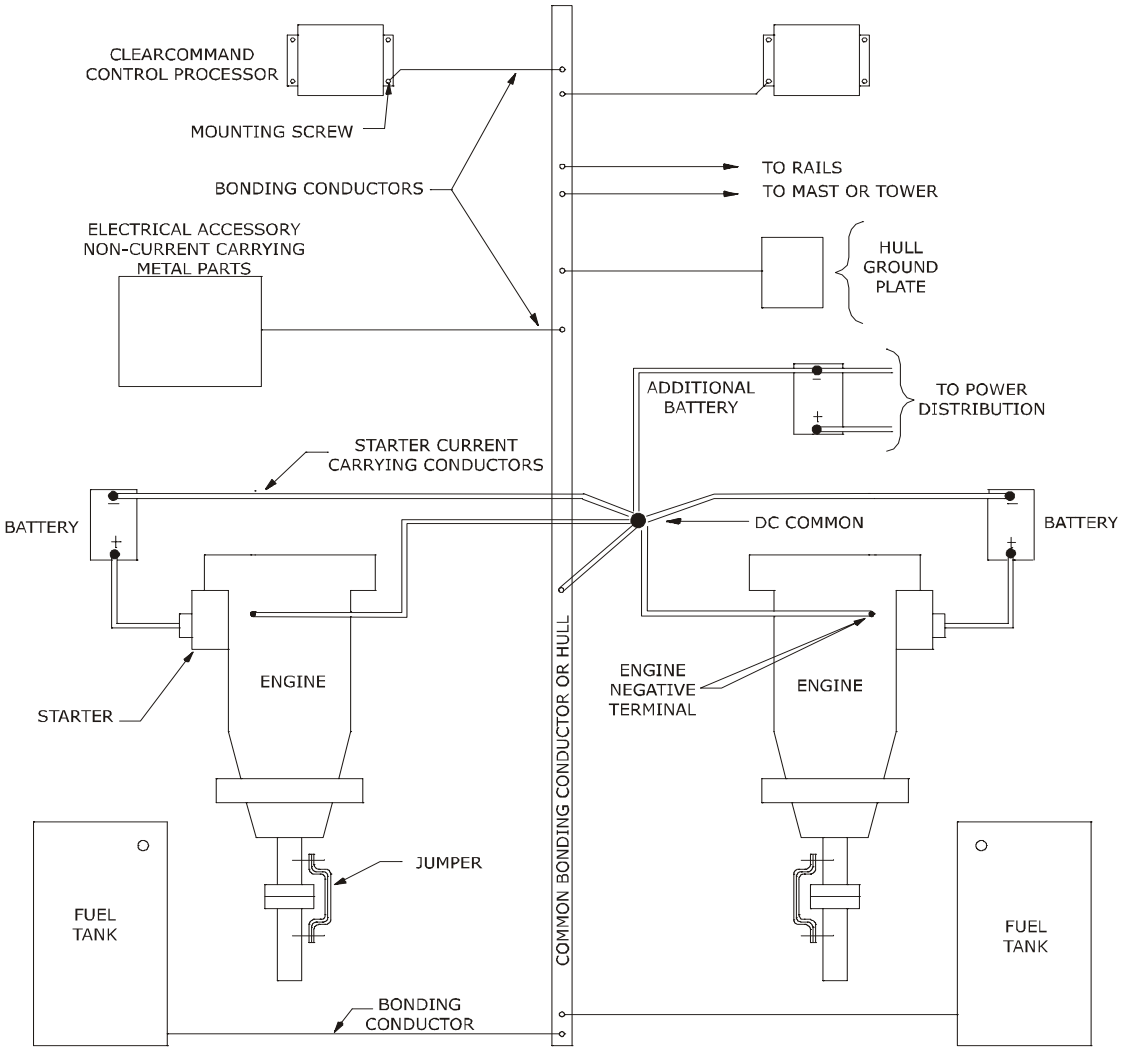

ZF Mathers, LLC
1415 Pacific Drive
Burlington WA 98233-3103 U.S.A.
800-546-5455 / 360-757-6265
Fax: 360-757-2500

MicroCommander, ClearCommand References and Parts Source

A) REFERENCES

1. American Boat & Yacht Council (ABYC)

   Box 806

   Amityville, NY 11701

   E-1 Bonding of Direct Current Systems

   E-3 Wiring Identification on Boats

   E-9 DC Electrical Systems on Boats

   H-2.4e or 32.4g Ambient Temp. 50 degrees C

2. Code of Federal Regulations

   33 CFR 183 Subpart I - Electrical Systems

   33 CFR 183, 410 Ignition protection

   33 CFR 183, 415 Grounding

   33 CFR 183, 425 Conductors: General

   33 CFR 183, 430 Conductors in circuit of less than 50 Volts

   33 CFR 183, 445 Conductors: Protection

   33 CFR 183, 455 Over-current and Protection: General

   46 CFR 111.01 - 15(b) Ambient Temp. Machinery Spaces 50 degrees C

   46 CFR 111.05- System Grounds

3. Society of Automotive Engineers

   400 Commonwealth Drive

   Warrendale, PA 15096

   J1171 External Ignition Protection

   J1428 Marine Circuit Breakers

   J378 Marine Engine Wiring

4. National Marine Manufacturers Association
   401 North Michigan Avenue
   Chicago, IL 60611
5. Underwriters Laboratories

B)PARTS SOURCE

Anti-Static Wrist Strap	P/N 517	[Thomas & Betts (P/N AWCC)]
Fuse	P/N 1030	[Bussman (Part No. GDC-1A)]
WAGO Tool	P/N 397	[WAGO (Part No. 236-332)]
Automatic Power Selector	P/N 13505	

ZF Mathers, LLC
1415 Pacific Drive
Burlington WA 98233-3103 U.S.A.
800-546-5455 / 360-757-6265
Fax: 360-757-2500
e-mail: zfmathers@zf.com

MMC-165 Rev.C 10-00

Electronic Propulsion Control Systems Three Year Limited Warranty

Your ZF Mathers product has been designed and manufactured by experienced engineers and craftsmen. ZF Mathers LLC., warrants for the period indicated below, each product to be free from defect in material and workmanship. Repair or replacement, at ZF Mathers option, will be provided if the product, upon ZF Mathers inspection, is found to be properly installed and operated in accordance with ZF Mathers Manual. This warranty does not apply to malfunction caused by damage, unreasonable use, misuse, repair or service by unauthorized persons or normal wear and tear.

1.0 Coverage Under Warranty

Three years from the date of purchase by the original end user.

1.1 Year One

No charge for equipment repair, parts and labor. Up to three hours labor toward troubleshooting and replacement of defective equipment.

1.2 Year Two and Three

There is no charge for equipment repairs performed at the factory that are covered under warranty. No labor allowance for troubleshooting and replacement of defective equipment.

2.0 No Coverage Under Warranty

The following will not be covered under warranty.

1. Travel to and from the job site.
2. Adjustment or calibration of any ZF Mathers equipment.
3. Adjustment or calibration of any associated equipment which may include but not limited to push-pull cables, engine governor or carburetor, transmission or trolling valve.
4. Damage due to accidents, improper installation or handling and or improper storage.
5. Damage due to faulty repairs performed by an unauthorized service representative.
6. Damage due to conditions, modifications or installation contrary to published specifications or recommendations.
7. Original installation charges or start-up costs.
8. Battery service including labor charges related to battery service.
9. Rental of equipment during performance of warranty repairs.
10. Unauthorized repair shop labor, without prior approval from ZF Mathers Service Department.
11. Shop supplies such as connectors, wire, cable, etc.

3.0 Warranty Service

Call 1-800-546-5455 or 1-360-757-6265 for your nearest ZF Mathers Factory Authorized Dealer.

1. Prior to returning any product to the factory, you must contact ZF Mathers Service Department for a Material Return Authorization (MRA) number. Return the product freight prepaid, marked clearly with the MRA number and a description of the malfunction.

2. If there is a defect covered by warranty, ZF Mathers will, at its option, either repair or replace the defective part or product. If after inspection, ZF Mathers determines that the product is not defective, it will return the product to the sender, freight collect.
3. Repair or replacement during the warranty period will not extend the warranty period.

This Warranty is expressly in lieu of all other Warranties, express or implied. Except to the extent prohibited by applicable law, ZF Mathers hereby disclaims all other implied or express warranties of any kind, including warranties of merchantability and fitness for a particular purpose. Under no circumstances shall ZF Mathers be liable for any consequential damages sustained in connection with the product or its use, including any costs or damages which result from loss of use of the product or any engine or boat with which it is used. ZF Mathers does not authorize any representative or agent to assume for it any obligation or liability other than those expressly set forth above. Some states do not allow limitations on how long an implied warranty lasts or the exclusion or limitation of incidental or consequential damages, so the above limitation may not apply to you. All implied warranties, if any, are limited to the duration of this express warranty. This warranty gives you legal rights, and you may have other rights which may vary from State to State.

ZF Mathers, LLC
1415 Pacific Drive
Burlington WA 98233-3103 U.S.A.
800-546-5455 / 360-757-6265
Fax: 360-757-2500
e-mail: zfmathers@zf.com

F-226 Rev.A 11-00

MicroCommander, ClearCommand Sea Trial Report

Vessel Name:_____ Trial Date:_____ SSN:_____

Owners Name:_____

Address:_____

Tel/Fax/e-mail:_____

Contact Name:_____

APPLICATION:

A:**Boat Builder**_____ Model_____ Size_____ Year_____

Original Equipment ___ Retrofit ___ Type of Controls Replaced_____

B:**Single or Twin Screw**_____

Engine Make_____ Model_____

Horsepower _____ RPM_____ Engine Hours_____

Reduction Gear/Drive_____ Model/Ratio_____ Trolling? Yes___ No___

Type of Service (Pleasure, Fishing, Rental, Etc.)_____

C:**Number of Remote Stations**_____

Actuator/Control Processor: Port Model_____ Starboard Model_____

Port SN:_____ Starboard SN:_____

Before Running Engine:	**Port**	**Stbd**
1. Voltage at the Battery Terminals.	_____VDC	_____VDC
2. Voltage at the Actuator/Control Processor.	_____VDC	_____VDC
3. Warm-up Indicator Light blinks in 'Ahead'. All Stations.	Yes ___ No___	Yes___ No___
4. Electric Cables are supported every 18 inches (45,72cm)	Yes ___ No___	Yes___ No___
5. Cable connections are tight at the Actuator/Control Processor and Control Heads.	Yes ___ No___	Yes___ No___
6. Engine Stop Switches at EACH Remote Station are operational.	Yes ___ No___	Yes___ No___
7. Check push-pull cable match. Disconnect push-pull cables at the clutch and throttle. Check that cables travel in the correct direction. Check the cable movement, insure that it matches clutch and throttle.	Yes ___ No___	Yes___ No___

Dock Side Tests (Running):		
1. Voltage at the Battery Terminals.	_____VDC	_____VDC
2. Does Engine 'Start' when Controls are OFF?	Yes ___ No___	Yes___ No___

3. Low Idle RPM. _____RPM _____RPM
4. High Idle RPM (optional). _____RPM _____RPM
5. Check Warm-Up Mode. Yes ___ No___ Yes___ No___
6. Check shift in both directions. Yes ___ No___ Yes___ No___

Sea Trials:

1. Check that Twin Screw Control Head levers match position and RPM through speed range.
   Yes ___ No___ Yes___ No___
2. Set maximum engine RPM as required. _____RPM _____RPM
3. Adjust Full Speed Reversal Delay _____SEC _____SEC
4. Is Synchronization operational? Yes ___ No___ Yes___ No___
5. Is Trolling Valve operational? Yes ___ No___ Yes___ No___

SW1 Switch Settings:

PORT								STBD							
	1	2	3	4	5	6	7		1	2	3	4	5	6	7
ON								ON							
OFF								OFF							

PORT JMPR 3 ___ ___
PUSH ← → PULL

JMPR 4 ___ ___
PUSH ← → PULL

STBD JMPR 3 ___ ___
PUSH ← → PULL

JMPR 4 ___ ___
PUSH ← → PULL

Comments (Please use additional paper as necessary):

General Installation Condition:

Any Irregularities:

ARE THE MANUALS ON BOARD? Yes___ No___ IS THE OPERATOR CARD ON BOARD? Yes___ No___

INSPECTOR_____ DATE_____

MAIL COMPLETED COPY TO:
ZF Mathers, LLC
1415 Pacific Drive
Burlington, WA 98233

OR FAX TO:
360-757-2500

APPENDIX B.1

1.0 TROUBLESHOOTING

The ClearCommand Control System consists of Control Heads located at the vessel's Stations, connected to Control Processor(s) located in the engine room area.

Before beginning troubleshooting, review the Appendix C Drawings. Become familiar with the component configuration on your vessel.

Carefully inspect the following:

- DC Power Source
- Component Location
- Component Condition
- Interconnecting Wiring
- Wire Termination's
- Mechanical Connections

A key in troubleshooting the ClearCommand System is identifying the problem as:

- DC Power Source
- Interconnection wiring or termination
- Mechanical Interface
- Component Calibration
- Component Failure

The ClearCommand System has Station-in-Command indicator lights on each Control Head, as well as audible tone indicators. These indicators will assist in troubleshooting and control system status.

When contacting an authorized ZF Mathers servicing dealer, or the ZF Mathers Service Department, please be ready with the Control Processor Part Number and Serial Number.

CAUTION: Static electricity can destroy electronic components. Any time the Control Processor cover is off, wear the wrist strap provided and connect it to the Processor frame. This will drain any static charge you may have on your person.

NOTE: Always check the other Stations, to see if the symptom can be repeated.

1.1 SYMPTOM - When DC Power is turned On, operator cannot take command at one Station (both Port and Starboard for twin screw).

Cause:

A) A corroded or loose electrical connection.

B) Incorrectly wired eight-conductor cable.

C) Defective Control Head.

Remedy:

A) At the Control Head verify crimps and screws are tight. Verify the station connections at the Processor. Tighten or re-crimp as necessary.

B) Rewire the cable connections as shown on Appendix B Drawing and Paragraph 5.6 of the main manual. Correct as necessary.

C) Verify the voltage between the red and orange wires (Terminals 3 and 4). The reading should be 4.80 to 5.00 volts DC. Verify the voltage at Terminals 3 and 4 while depressing the transfer button. The voltage reading should be less than 0.50 volts DC. If the voltage remains near 5.00 volts, the Control Head needs repair.

1.2 SYMPTOM - ONE SIDE WILL NOT TAKE COMMAND WHEN DC POWER IS FIRST TURNED ON.

Cause:

A) Port and Starboard power sources do not have a common ground (only the Starboard would be unable to take command).

B) Miswired eight-conductor cable.

C) Defective Control Head potentiometer.

Remedy:

A) Verify that the negative terminal connections of both batteries are to a common point. If not, connect both to a common point.

B) Rewire cable connections as shown on the Appendix C Drawing, Appendix B Control Head Variations sheets, and the Control Head Installation Section of the main manual.

C) Verify the voltage between the yellow and the blue wires (Terminals 5 and 7) at the suspected Control. Head. The reading should be 4.80 to 5.00 VDC. Measure the voltage between the blue and green wires for left hand Control Heads and the yellow and green wires for right hand Control Heads. The measurement should be between 49 percent and 51 percent of that measured at Terminals 5 and 7 with the Control Head lever at the Neutral Idle position. If not, replace the Control Head or install a Control Head Repair Kit

1.3 SYMPTOM - THE ENGINE RPM VARIES, WITHOUT MOVING THE CONTROL HEAD LEVER.

Cause:

A) Problem with the governor.

B) Erratic command signal.

Remedy:

A) Signal to the governor should be steady. If not, go on to b).

B) At the Processor, measure the DC voltage at the yellow and green wires (Terminals 5 and 6) of the Station-in-Command. The reading should be a stable voltage (no variations). If not, check for a loose connection between the Processor and the Control Head. If the connections are tight and no corrosion is present, replace the Control Head or install a Control Head Repair Kit.

1.4 SYMPTOM - The indicator light blinks when the Station's transfer button is pressed, and continues to blink after released (Control Head lever is in the Neutral/Idle position). Cannot transfer to this Station if another Station was previously in command.

Cause:

A) Off center potentiometer.

Remedy:

A) Replace the Control Head or install a Control Head Repair Kit.

1.5 SYMPTOM - The engine RPM reduces to Idle, transmission to Neutral, the Control Head indicator light turns OFF, and a slow repetitive tone emitted at all Stations after repositioning the Control Head lever.

Cause:

A) A drop in battery voltage (12 volt systems only) at the Processor.

B) Loose or severed eight-conductor connections at the Control Head.

C) Defective Control Head.

Remedy:

A) Measure the voltage at the battery without the engine or charger running. The reading should be a minimum of 12.4 volts. If not, the battery needs charging or possibly replacing. Measure the voltage at the Processor. This reading should be not more than 0.20 volt below the measured battery voltage.

B) Check connections at the Control Head. Tighten or replace as necessary.

C) If the voltage at the Processor passed, replace the Control Head or install a Control Head Repair Kit.

1.6 SYMPTOM - CANNOT OBTAIN WARM-UP MODE.

Cause:

A) The Processor is sensing lever movement in the Astern direction.

Remedy:

A) Depress the Station Transfer button, while moving the Control Head lever to the Astern detent. If the red indicator light begins blinking, the Processor may be set-up incorrectly. Correct by performing the following:

- Check the eight-conductor wiring by referring to the Appendix C Drawing, Appendix B Control Head Variations Sheets, and the Control Head Cable Connection Section of the main manual.

- The **yellow** wire should go to Terminal **5** at both the Processor and Control Head for **right** had Control Heads.

- The **blue** wire should go to Terminal **7** at the Control Head and Terminal **5** at the Processor for left hand Control Heads.

- The **blue** wire should go to Terminal **5** at the Control Head and Terminal **7** at the Processor for **left** hand Control Heads.

1.7 SYMPTOM - No audible tone at a Control Head when system is first turned ON, but otherwise works perfectly.

Cause:

A) Incorrectly wired eight-conductor cable.

B) Defective sound transducer.

Remedy:

A) Verify connection of the black wire to Terminal 1 in the Processor and Terminal 1 at the Control Head. Verify connection of the red wire to Terminal 3 in the Processor and Terminal 3 at the Control Head. In addition, the red indicator light would not work if the red wire was loose or incorrectly wired. Check for loose or corroded connections.

B) Measure the voltage at Terminals 1 and 2 of the Control Head (do not depress the transfer button). The voltage should fluctuate at a steady rate. If a fluctuating voltage is not measured, replace the Control Head, or install a Control Head Repair Kit.

1.8 SYMPTOM - Audible steady tone from all Stations. Cannot gain command at any Station.

Cause:

A) Low battery voltage at the Processor.

B) Component failure on the Processor circuit board.

Remedy:

A) Check the battery voltage at the Processor. If the measurement is less than 8 volts, replace battery or correct source of voltage drop.

B) If the voltage tested good, the circuit board needs repair or a Circuit Board Kit needs to be installed.

1.9 SYMPTOM - The Control Head red indicator light does not light when in command, but everything else works perfectly.

Cause:

A) Incorrectly wired eight-conductor cable.

B) Defective red indicator light

Remedy:

A) Verify brown wire connection to Terminal 2 of the Processor and the Control Head.

B) Measure the DC voltage between Terminals 2 and 3 at the Control Head. The reading will be 1.00 to 2.00 volts in normal operation. A measurement of 4.00 volts means the indicator light is OPEN. Replace the Control Head or install a Control Head Repair Kit.

1.10 SYMPTOM - No tones or lighted indicator lights at the Control Head, and no lighted indicator lights on the Processor circuit board.

Cause:

A) No power to the Processor.

B) Polarity of the battery voltage reversed.

C) Fuse on the Processor circuit board blown.

Remedy:

A) Verify the power source to the Processor.

B) Connect the red wire to the terminal labeled '+ ' and the black wire to the terminal labeled '- '.

C) Measure the battery voltage at the Processor. It is MANDATORY to correct power source if voltage can exceed 40 volts under any condition. Replace the fuse with the spare, which is taped to the relay on the Processor circuit board. If the fuse again blows, the circuit board needs repair or replaced with a Circuit Board Kit.

1.11 SYMPTOM - THE ENGINE STARTS TO TURN OVER WHILE STARTING AND THEN STOPS. A SLOW REPETITIVE AUDIBLE TONE FROM ALL CONTROL HEAD STATIONS.

Cause:

A) The voltage to the Processor has dropped too low, due to the starters current requirements.

B) Battery charge is low.

Remedy:

A) Supply power to the Processor from a battery other then the starting battery.

B) Recharge or replace the battery.

1.12 THE ENGINE WILL NOT START.

Cause:

A) ClearCommand does not have power turned ON.

B) ClearCommand does not have a Station in command.

C) The Control Head levers at the Station-in-Command are not at the Idle position.

D) Low battery voltage.

E) Faulty start interlock circuit in the Processor.

F) Faulty wire or component in the starting system.

Remedy:

A) Turn power ON to the ClearCommand System.

B) Take command at a Station.

C) Place the Station-in-Command Control Head levers into the Idle position.

D) Check the battery voltage. If the voltage is low, charge or replace the battery.

E) Connect the two start interlock wires (yellow with red stripe) at the Processor to the same terminal. If the engine starts, have the Processor repaired.

F) Ensure starting system is installed and works correctly.

1.13 SYMPTOM - ONE LONG - ONE SHORT TONES FROM ALL CONTROL HEAD STATIONS.

Cause:

Clutch position feedback error.

Remedy:

Depress the transfer button twice. Have Processor repaired at the first opportunity.

1.14 SYMPTOM - HIGH REPETITION RATE TONE AT ALL REMOTE STATIONS.

Cause:

A) Incorrectly adjusted push-pull cable.

B) Defective push-pull cable.

C) Low battery voltage at the Processor (12 volt systems).

D) Defective servo unit in the Processor.

Remedy:

A) Disconnect the push-pull cable from the clutch selector lever at the transmission. Operate the ClearCommand System. If the rapid tone is no longer present, follow the Push-Pull Cable Installation Section in the main manual.

B) Remove the push-pull cables from the Processor one by one. Operate the ClearCommand System. If the rapid tone is no longer present, replace the defective push-pull cable.

C) Measure the battery voltage at the Processor. If the measured voltage is 8 to 12 volts, check the power source.

D) If a), b), and c) tested good, the entire Processor needs repair or replacement.

1.15 SYMPTOM - CANNOT GET ANY SPEED ABOVE IDLE.

Cause:

A) Gear oil pressure switch is not closing, or is incorrectly wired.

B) The gear oil pressure switch not installed.

C) Caterpillar synchronization selected, and the opposite lever is the Lead.

Remedy:

A) Replace the pressure switch or correct wiring.

B) Install a jumper between the appropriate terminals of the Processor. Refer to the main manual for appropriate terminals.

C) Turn Off the synchronization switch.

1.16 SYMPTOM - THE THROTTLE WILL NOT INCREASE ABOVE IDLE (NO FAULTS ON THE CATERPILLAR SYSTEM).

Cause:

A) The Clutch Oil Pressure Switch is defective or not properly set.

B) If a Clutch Oil Pressure Switch is not being used, there needs to be a jumper on the Auxiliary Circuit Board.

Remedy:

A) Replace or correctly calibrate the Clutch Oil Pressure Switch.

B) Install a jumper between the appropriate terminals of the Auxiliary Circuit. Refer to the Drawing in Appendix C for appropriate terminals.

APPENDIX C.1

Single Screw Dwg 10740D-1

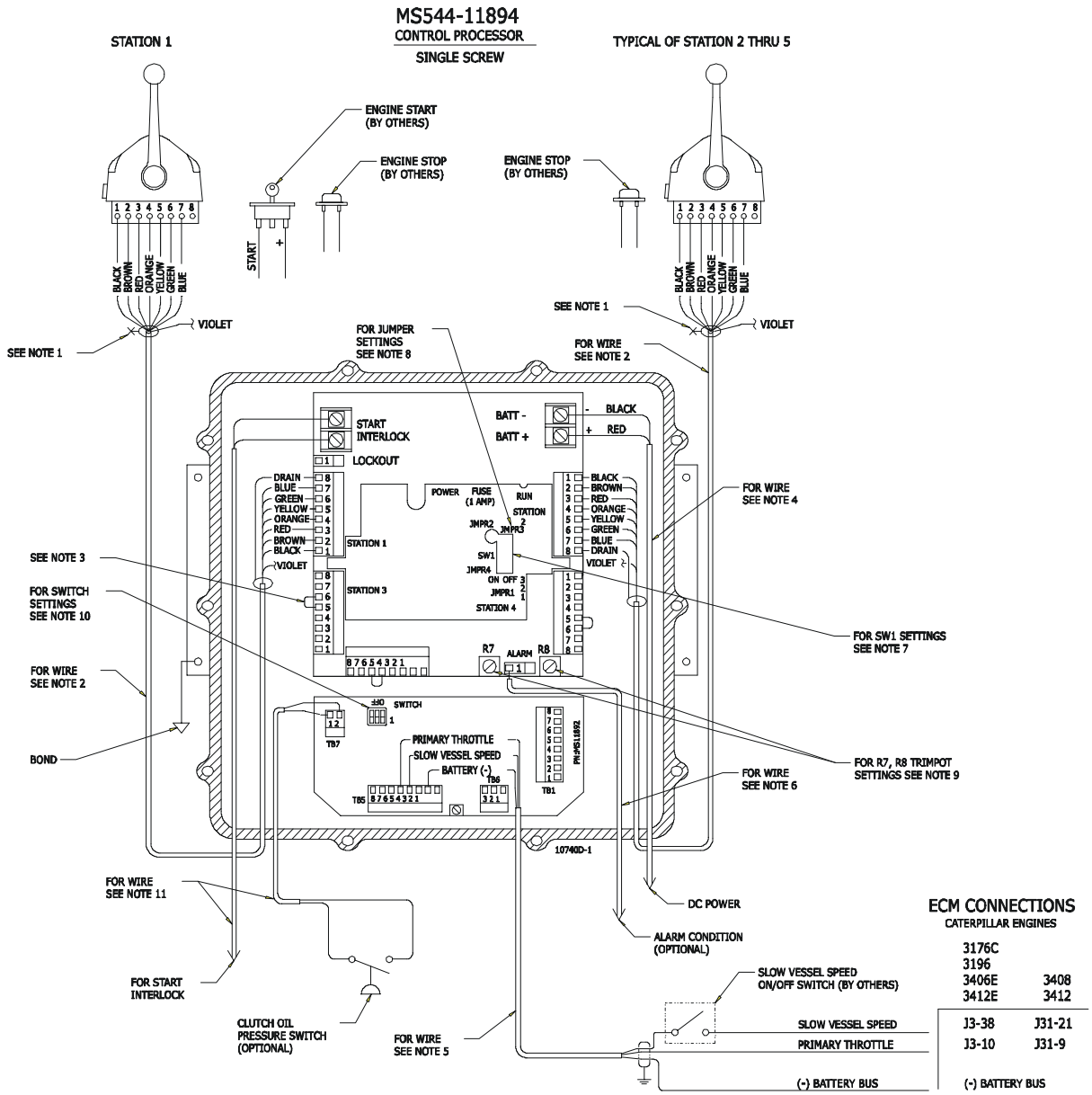

Twin Screw Dwg 10740D-2

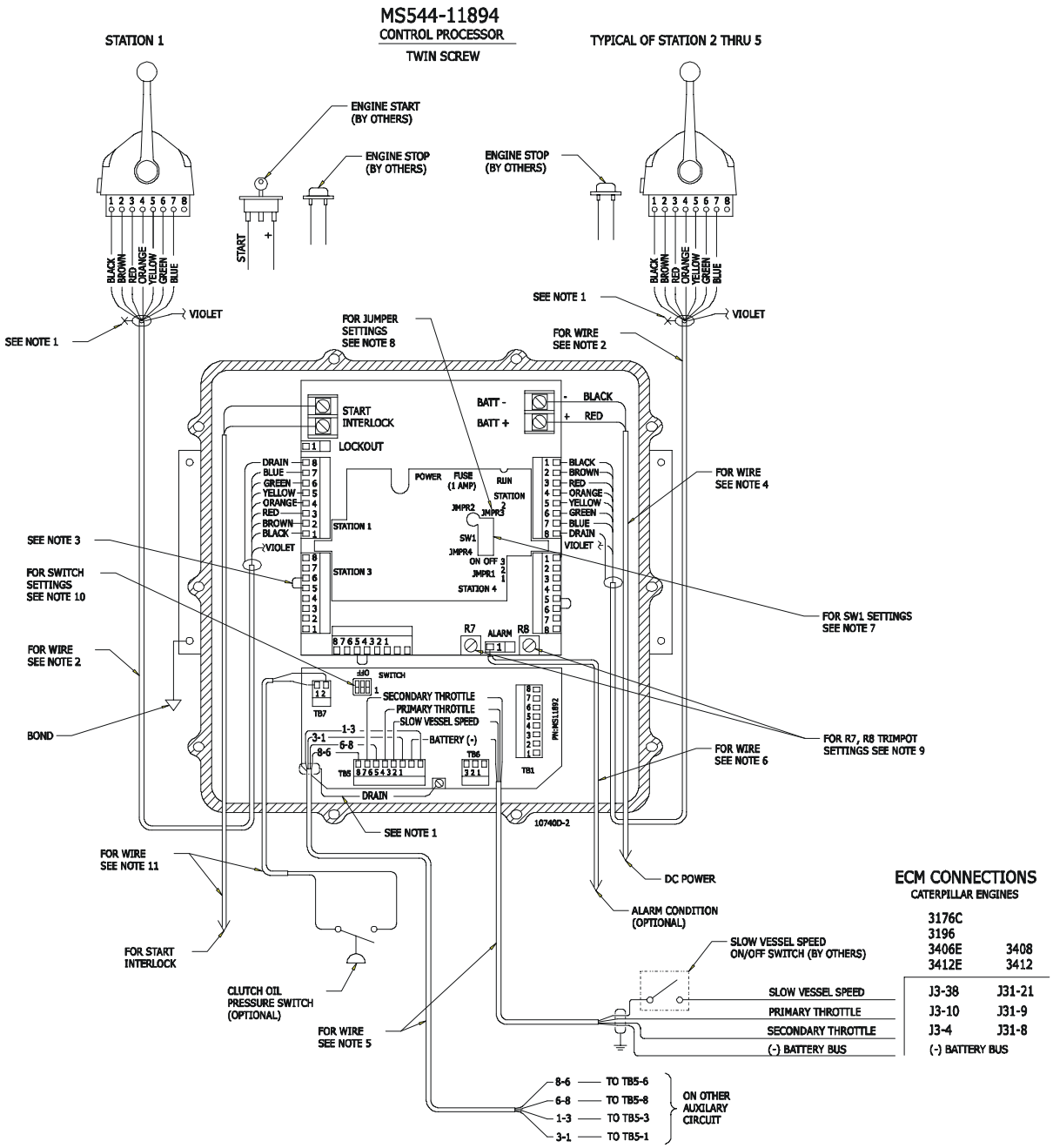

Notes Page Dwg 10740D-3

MS544-11894 NOTES

10740D-3

- NOTES -

1. INSURE THAT DRAIN WIRE ON ALL SHIELDED CABLE IS CONNECTED ONLY AT ONE END AS SHOWN ON DRAWING AND THAT THE DRAIN WIRE DOES NOT TOUCH THE CHASSIS OR ANY OTHER CONDUCTIVE SURFACE.

2. 8 CONDUCTOR 20 AWG SHIELDED CABLE (P/N 00350) WITH COLOR CODE AS SHOWN.

3. REMOVE JUMPER IF CONNECTING A CONTROL HEAD TO THIS TERMINAL BLOCK.

4. ELECTRICAL CABLING MUST BE 14 AWG OR LARGER.

5. ELECTRICAL CABLING MUST BE 16-20 AWG SHIELDED CABLE.

6. ELECTRICAL CABLING MUST BE 16-20 AWG.

7. DIP SWITCH SETTINGS. (PRESET FROM PRODUCTION)

1 ON -
2 ON -
3 ON -
} CLUTCH MOVEMENT } THIS RESULTS IN ONE INCH CABLE MOVEMENT EACH DIRECTION FROM NEUTRAL. TURNING SWITCHES "OFF" WILL INCREMENT CABLE MOVEMENT BY THE AMOUNT SHOWN. } 1/4" 1/8" 1/16"

4 OFF -
5 ON -
6 ON -
} PAUSE IN DIRECTION (SEE TABLE BELOW)

7 ON - THROTTLE PAUSE

ON - 0.5 SECOND
OFF - 1.0 SECOND

SW1-4	SW1-5	SW1-6	PAUSE ON DIRECTION CHANGE
OFF	OFF	OFF	O SECONDS
OFF	OFF	ON	1.5 SECONDS
OFF	ON	OFF	3.5 SECONDS
OFF	ON	ON	5 SECONDS
ON	OFF	OFF	7 SECONDS
ON	OFF	ON	8.5 SECONDS
ON	ON	OFF	10.25 SECONDS
ON	ON	ON	11.5 SECONDS

8. JUMPER SETTINGS. (PRESET FROM PRODUCTION)

JUMPER 1 — 3 2 1 — MUST BE IN THIS POSITION TO USE STATION 5

JUMPER 2 — 2 1 — NOT FUNCTIONAL

JUMPER 3 — 3 2 1 — NOT FUNCTIONAL

JUMPER 4 (CLUTCH) — 3 2 1 — CLUTCH DIRECTION (PULL FOR AHEAD)

9. R8 IS NOT FUNCTIONAL. R7 (HIGH IDLE) TRIMPOT SETTING FULLY COUNTER CLOCKWISE. (NO HIGH IDLE)

10. AUXILIARY BOARD SWITCH.

1 - NOT USED

2 - NOT USED

3 - NOT USED

11. ELECTRICAL CABLING MUST BE 14-16 AWG.